NITECORE®
The All-Round Flashlight Expert

EA41 User Manual

Features

- Novel 'Unique Integrated Technology' offers a more sturdy and lightweight body.
- Utilizes a CREE XM-L2 U2 LED
- Maximum output of up to 1020 lumens
- Integrated “Precision Digital Optics Technology” provides extreme reflector performance
- Boasts a peak beam intensity of 28,276cd and a throw distance of up to 335 meters
- Innovative dual switch offers a user-friendly interface
- Eight rapidly switchable brightness modes to select from
- High efficiency circuit board provides up to 400 hours runtime
- Integrated power indicator light displays remaining battery power (Chinese Patent:ZL201220057767.4)
- Instant ultra-low or turbo to bring flexibility and convenience
- Reverse polarity protection prevents damage due to incorrectly inserted batteries
- Stainless steel retaining ring protects the core components from damage
- Toughened ultra-clear mineral glass with anti-reflective coating
- Constructed from aerograde aluminum alloy
- Sturdy HAIII military grade hard-anodized
- Waterproof in accordance with IPX-8 (two meters submersible)
- Impact resistant to 1.5 meters
- Tail stand capability

Dimensions

Length: 117mm (4.6”)
Head diameter: 40 mm (1.57”)
Tube diameter: 41.8mm (1.65”)
Weight: 151g (5.33oz)(without battery)

Accessories

Quality holster, lanyard, spare O-ring

Battery Options

	SIZE	Nominal voltage	Usability
Primary AA battery	AA	1.5V	Y (Recommended)
Rechargeable AA battery	AA	1.2V	Y (Recommended)
Primary AA Lithium battery	L91	1.5V	Y
Primary LiFePO4 battery	14500	3.2V	N (Banned)
Rechargeable Li-ion battery	14500	3.7V	N (Banned)

Output & Runtime

FL 1 STANDARD	TURBO	HIGH	MID	LOW	LOWER
	1020 LUMENS	580 LUMENS	160 LUMENS	50 LUMENS	1 LUMENS
	1h45min	2h45min	12h	30h	400h
	335m (Beam Distance)				
	28276cd (Peak Beam Intensity)				
	1.5m (Impact Resistant)				
	IPX-8, 2m (Waterproof AND Submersible)				

NOTICE
The above data has been measured in accordance with the international flashlight testing standards ANSI/NEMA FL1 using 4 x 1.2V 2400mAh AA batteries under laboratory conditions. The data may vary slightly during real-world use due to battery type, individual usage habits and environmental factors.

Operation Instructions

Battery installation

1. Insert batteries with the positive (+) and negative (-) ends corresponding to the diagram on the inside of the battery compartment.
2. Tighten the tail cap by aligning the two gold pins on the inside of the tail cap with the corresponding holes on the flashlight body and rotate clockwise.

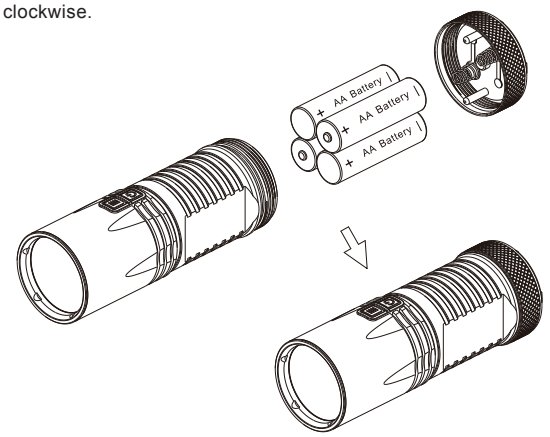

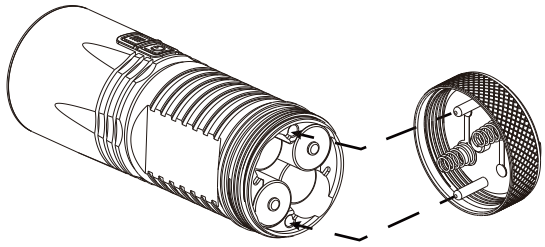

Tips
Inserting batteries in a dark environment: Two of the four battery slots in the EA41’s battery compartment feature grooves indicating that batteries should be inserted with the negative (-) ends facing forward, while the two slots with no grooves require the batteries to be inserted with the positive (+) ends facing forward. In this way, batteries can be inserted correctly through tactile feedback alone.

After loading the batteries, the power indicator light will blink to indicate the battery power. Please refer to the “Power Tips” section of this manual for details.

WARNING
1. Insert batteries using the image on the inside of the battery compartment as a reference.
2. Do not mix rechargeable and non-rechargeable batteries.
3. Do not mix batteries of different types/brands.

On/Off Operation

To turn on: press the on/off switch to turn the light on
To turn off: press the on/off switch again to turn the light off

Standby Mode

With the light on, press and hold the on/off switch for more than one second to turn off the light and activate location beacon function. The blue power indicator will flash once every three seconds to indicate the location of the EA41. In this mode, the EA41 can keep running on 4 × AA batteries for 120 days.

NOTE: With the power indicator off in standby mode, the EA41 can work for more than 12 months with 4 × AA batteries.

Thanks for purchasing NITECORE!

NITECORE®
The All-Round Flashlight Expert

Brightness Levels

With the light on, press the mode switch to cycle through brightness levels of ultra-low, low, medium, high and turbo. This mode provides an intelligent memory function to ensure direct access to the setting last used when reactivated.

Instant ultra-low/turbo

Instant ultra-low: with the light off, press the on/off switch for more than one second to create ultra-low output of 1 lumen;
Instant turbo: with the light off, press the mode switch for more than one sencond to create turbo output of 1020 lumens.
NOTE: The EA41 will lower its output lumens after 20 minutes of use to prevent overheating and preserve battery longevity.

Special modes (Strobe/Location/SOS)

With the light on, press the mode switch for more than one second to enter strobe mode. To cycle through all three modes of Strobe / Location / SOS, simply press the mode switch for more than one second again. To exit special modes, simply press the on/off switch .

Strobe ready

With the light off, press the mode switch twice in quick succession to enter strobe mode instantly. To exit, simply press any button and the light will turn off.

Lockout/Unlock

With the light turned on, press and hold dual switches for more than one second until the flashlight is switched off and enters into lockout mode. In this mode, the EA41 can continue working on one set of batteries for over 12 months.
Lockout mode prevents accidental activation of the flashlight. To exit lockout mode, simply press and hold dual switches for more than one second again.
NOTE:
When the EA41 is kept in a backpack or left unused for extended periods, Nitecore recommends removing the batteries to cut off power, thus preventing battery drain or accidental activation of the flashlight.

Power Tips

Each time batteries are inserted, or the mode switch is pressed with EA41 turned off, the blue LEDs will blink to indicate battery levels:
1. Three times for battery levels over 50%;
2. Twice for battery levels below 50%;
3. Once for battery levels close to depletion (below 10%).

Changing Batteries

Batteries should be replaced when any of the following occurs: The power indicator blinks rapidly, output appears to be dim or the flashlight becomes unresponsive.

Maintenance

Every 6 months, threads should be wiped with a clean cloth followed by a thin coating of silicon-based lubricant.

Warranty Service

All NITECORE® products are warranted for quality. DOA / defective products can be exchanged for replacement through a local distributor/dealer within the 15 days of purchase. After 15 days, all defective / malfunctioning NITECORE® products will be repaired free of charge for a period of 60 months (5 years) from the date of purchase. Beyond 60 months, a limited warranty applies, covering the cost of labor and maintenance, but not the cost of accessories or replacement parts. The warranty is nullified in all of the following situations:
1. The product(s) is/are broken down, reconstructed and/or modified by unauthorized parties.
2. The product(s) is/are damaged through improper use.
3. The product(s) is/are damaged by leakage of batteries.

For the latest information on NITECORE® products and services, please contact a local NITECORE® distributor or send an email to service@nitecore.com

※All images, text and statements specified herein this user manual are for reference purpose only. Should any discrepancy occurs between this manual and information specified on www.nitecore.com, information on our official website shall prevail. Sysmax Industry Co., Ltd. reserves the rights to interpret and amend the content of this document at any time without prior notice.

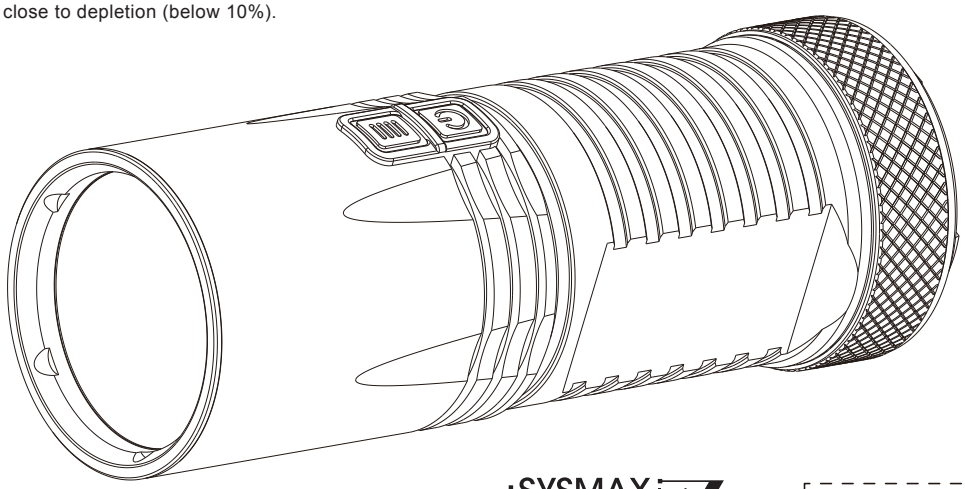

SYSMAX Ind.
SYSMAX Industry Co., Ltd.
TEL: +86-20-83862000
FAX: +86-20-83882723
E-mail: info@nitecore.com
Web: www.nitecore.com
Address: Rm1401-03, Glorious Tower, 850 East Dongfeng Road, Guangzhou, China 510600

Please find us on facebook: NITECORE Flashlights

20150826

Thanks for purchasing NITECORE!