VICO-MF2 GPS

2K EXTREME HD 2304 x 1296

UHDR ULTRA HIGH DYNAMIC RANGE

►Installation Guide

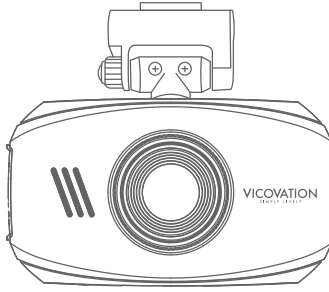

VICOVATION®
SIMPLY LIVELY

Index

English 02

中文 14

Vico-MF2 Installation Guide

Thank you for choosing Vico-MF2 Car Camcorder.
To ensure safety, please read this manual carefully before installation.

Vico-MF2 Exterior Overview :

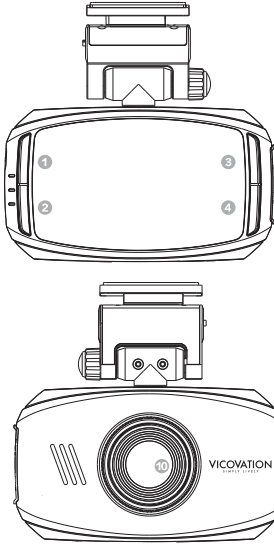

1. Start/Stop Recording/Confirm
2. Emergency Recording /Menu/Return
3. Up/Change Exposure Values
4. Down/Mute
5. External GPS socket
6. Power button
7. LED Indicator for Power
8. LED Indicator for Recording

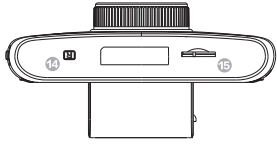

9. LED Indicator for GPS
10. Lens
11. Power Port
12. Mini HDMI Output
13. USB Port (Data)
14. Reset
15. Micro SD card slot

Vico-MF2 Accessories：

Vico-MF2 Accessories：

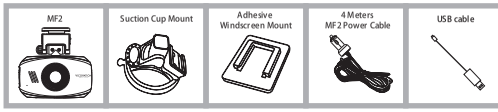

- Installation guide
- Warranty card
- GPS Module

Advanced Driver Assistance System(ADAS) can be unlocked after connected with GPS Module.

1. Lane Departure Warning System
2. Lead Car Departure Notification System
3. Forward Collision Warning System
4. GPS Tracking
5. Driver Fatigue Alert System
6. Overspeed Alert System
7. Headlights-on Reminder

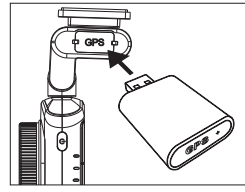

Ultra-HDR (High Dynamic Range) @1080p 30fps HDR Mode

Ultra-HDR (High Dynamic Range) in 1080p@30fps HDR Mode
Vico-MF2 is equipped with the latest Ultra-HDR technology. It adjusts the images to the best balance between bright and dark and generates extremely high quality 1080p recording footages. The default resolution setting is under 1080p@30fps HDR mode.

UHDR
ULTRA HIGH DYNAMIC RANGE

Suction Cup Mount Installation

Please make sure to face the direction of the mounts toward the windshield.

Vico-MF2 + Suction Cup Mount

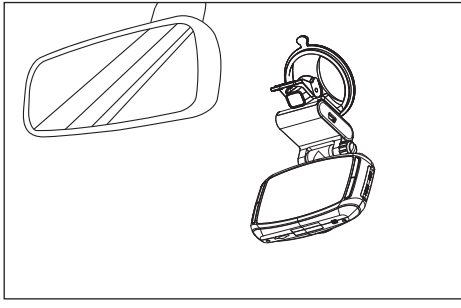

Vico-MF2 + 3M Adhesive Windscreen Mount

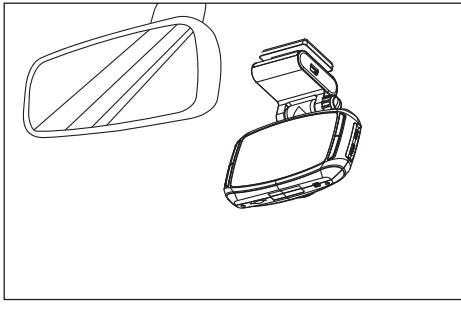

Camera and Cord Installation

Installation Steps

1. In order to keep the device functioning properly, please use the VicoVation power cable that comes with the package at all times.

2. Plug the power cable into the D/C outlet then connect the USB side with Vico-MF2 insert into the power port.

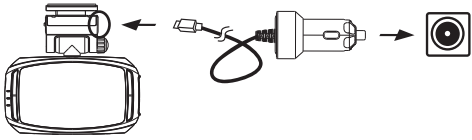

Recommend Installation Position for Wiring

To achieve a clean looking installation after you have plugged the camera in follow the cord back from the camera and tuck it in under the roof headliner. Then run it along the “A” Pillar and tuck it behind. Finally hide the cable under the passenger side floor mat.

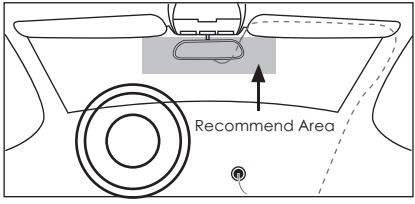

Special Notice:

1. It is not recommended to wiring the cables on your own if your car is equipped with airbags in the “A” Pillar. Please seek for professional assistance.

2. To avoid effecting the water proof performance on the doors, please restore the rubber seal properly after wiring the power cable.

3. MF2 Power Cables are specially designed and only for MF2 dashcams.MF2 Power Cables are not compatible with other VicoVation products.

Camera and Cord Installation

1. Insert the memory card into microSD Card Slot following the direction shown in the picture. Push to the end until you hear a light click.

2. Vico-MF2 supports 1296p/1080p recording, and a class 10 memory card must be used.

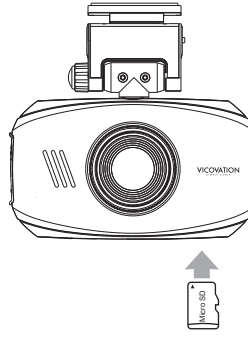

Recording Storage Capacity

(10 sets of EmgencyRecording is not included)

	2560p 30fps	1296p 30fps	1080p 30fps	720p 60fps	720p 30fps
8GB	60 mins	60 mins	70 mins	90 mins	130 mins
16GB	120 mins	120 mins	140 mins	180 mins	260 mins
32GB	240 mins	240 mins	280 mins	360 mins	520 mins
64GB	480 mins	480 mins	560 mins	720 mins	1040 mins

3. The device will start up and enter Recording Mode once you connect the power cable with the device. Please format your memory card before you operate for the first time.

4. Please turn off the device before you eject the memory card. Ejecting the memory card while recording is prohibited.

5. The USB port is only for computer use. Plugging the power cable into the USB port may damage the device.

Main Display Icons

Recording Mode Interface

Icons on the upper side bar (from left to right) :
Recording Mode /
Power /
Memory Card /
G-Sensor Function Indicator /
Current Time /
Mute

Icons on the left side bar (from top to bottom) :
Recording Mode /
GPS Indicator /
Speed Warning setting /
ADAS /
HDR / EV / Recording Resolution /
Loop Setting

Snapshots Mode Interface

Icons on the upper side bar (from left to right) :
Snapshots Mode /
Power /
Memory Card /
Photo Size

Switch Modes

Stop recording→Press DOWN to switch between modes.

Main Settings

Instructions on entering Menu:

Stop recording then press EMERGENCY on the lower left corner to enter Menu.

There are two labels on the upper right corner in the Menu, press EMERGENCY on the lower left corner to switch. Press twice to exit.

《Label 1》	
Video Resolution：	Video Resolution: Set video recording resolution. Default is 1080p HDR.
Video Quality：	Set video recording quality. Default is S.Fine.
Deflicker：	Adjust this setting depend on the country you are in. Default is Auto.
Time Stamp：	Date and time will be embedded on the video. Default is On.
[ADAS Detect]：	Turn on this feature to enable Lane Departure Warning System, Speed Cameras Detection In Taiwan、Lane Depature Warning System、Headlights-on Reminder、Lead Car Departure Notification System、Forward Collision Warning System、Driver Fatigue Alert System.
Loop Setting：	Change recording time per video under 1 min, 3 mins, or 5 mins. Default is 3 mins.
Time Zone：	Set GPS regulation on time zone. Default is +8.
AE Bias：	Chang exposure volume. Default is 0.0.
Speed Alert System：	When the driving speed is faster than the set value, the device will alert the drive with a beep warning sound and an alert icon to be displayed on the screen. Default is Off.
Keypad LED：	Change the lights on the keypad to be on or off. Default is On.
G-Sensor Sensitivity ：	Set the sensitivity on the G-Sensor. Default is Medium.
Parking Surveillance：	Monitor your car while it is stationary from impacts or sabotage. The video recording will be activated by Motion Detection. Default is Off. NOTE: This is not Smart Parking Surveillance (SPS). It is advised to turn this function off while driving.

《Label 2》	
Language Setting：	Change language in between Traditional Chinese / Simplified Chinese / English. Default is English.
Television Display System：	Switch between NTSC or PAL. Default is NTSC.
Vico-Tag：	Users may customize 9 characters to be embedded under Time Stamp.
Date/Time：	Set the displayed time on the device and footages.
Format：	Format the inserted memory card.
Factory Reset：	Reset to factory settings.
Screen Saver：	Set a period of time before the display screen gets dark. Default is Off.
Volume：	Change the sound on the device to be on or off. Default is On.
Version：	Firmware version on this device.

Playback Settings

Enter Playback Mode：

1. Under Recording Mode, press CONFIRM on the upper left to stop recording. Then press SWITCH on the lower right twice to enter Playback Mode.
2. After entering Playback Mode, press Up button on the upper right to switch in between Emergency Recording folder and Normal Recording folder.
3. You may choose files to preview to after pressing CONFIRM, press CONFIRM again to play.

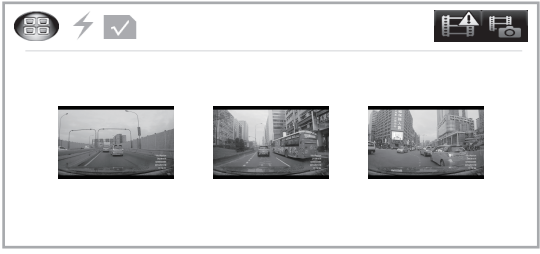

Playing On a Computer

1. Connect the device to the computer using Vico-USB cable.

2. After pressing POWER, the device will be turned on and enter USB Mode. You may browse the files in the folders on the device.

3. Copying the files onto the computer first before playing is highly recommended.

4. When connected with the computer for the time, the device would program a new player on the memory card. Users may play recorded footages using this player to see GPS tracking information. Users who use Windows operating system shall choose “Run this program as an administrator”.

3-Axis G-Sensor Settings

Vico-MF2 is equipped with 3-Axis G-Sensor. Emergency Recording can automatically be trigged when impacts are sensed. In order to avoid false alert, this setting is OFF by default. Please turn on this function once the device is properly installed in car.

Emergency Recording Settings

1. During driving, special circumstances, or emergency accidents, Emergency Recording can be manually trigged by pressing EMERGENCY on the lower left corner. After trigged, a yellow triangle sign would appear on the upper screen.

2. An Emergency Recording file would consist the prior 10 seconds and the subsequent 20 seconds into an independent file. This 30 seconds file will be kept under EVENT folder and won't be erased by circulated Normal Recording.

Accessories

Vico-Power PLUS (Optional Accessory)

Power PLUS is a power safety device which connects to car battery to work with Dash Cam/Black Box, continuously providing power after engine-off while parking. Together working with Parking Surveillance function, your Dash Cam can have motion-detection recording after you left your car, for having full protection of your car. Power Plus will auto-detect your battery status to cut-off power supply to prevent car battery from being drained out.

Vico-Power PLUS Special Features

1. Low Voltage Protection
2. Over-Temperature Protection
3. Auto Shutdown Timer
4. Overcurrent & Impulse current Protection

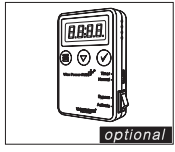

HD-Player

1. After connecting to the computer using the Vico-USB cable, HD Player would automatically appear in the folder.

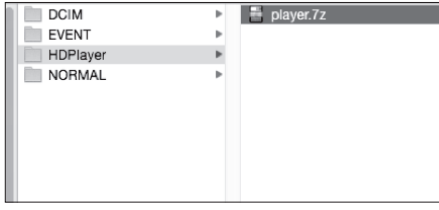

2. Install HD Player onto the computer. Choose SD card to play files.Player would display GPS tracking and 3-Axis G-Sensor data.

Limited Warranty Service

1. The limited warranty starts from the Original Purchase Date. 12 months limited warranty is available on all car video recorders (body units only) and Vico-Power PLUS. 6 months limited warranty is available on all the accessories of VicoVation. The original valid proof of purchase will be required.

2. The limited warranty is only valid in the countries where this product is sold. Please contact the retailer or online shop who sold this unit for detailed in-warranty service.

3. The limited warranty does not apply to the damages caused by shipping, malfunctioning in events of accident, misuse, abuse, water, fire, or other acts of nature, external causes, or faulty installation.

4. Warranty is void if this unit has been disassembled or modified.

If you have any questions, please feel free to contact us or our local distributors.
Email : service.en@vicovation.com
Facebook : www.facebook.com/VicoVationOfficial

Vico-MF2 Ultra-HDR行車紀錄器安裝操作指南

感謝您選購Vico-MF2 Ultra-HDR行車紀錄器，請詳閱安裝操作指南，並注意相關提醒，正常操作主機。

Vico-MF2 產品外觀介紹

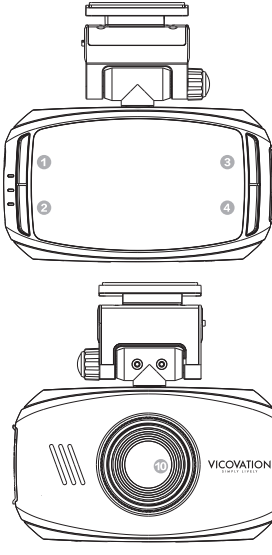

1. 錄影鍵 (確認鍵)
2. 緊急錄影鍵 (進選單/返回鍵)
3. 向上鍵 (調整EV值)
4. 向下鍵 (快速靜音/錄音，模式切換)
5. GPS模組接口
6. 電源開關
7. 電源指示燈
8. 錄影指示燈

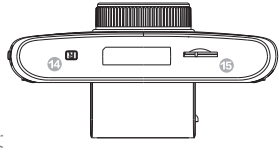

9. GPS訊號指示燈
10. 百萬像素鏡頭
11. 車充電源接口
12. Mini HDMI輸出接口
13. USB輸出接口 (連接電腦用)
14. Reset鍵
15. Micro SDHC卡槽

Vico-MF2 產品盒內標準配件

MF2產品盒內標準配件內容：

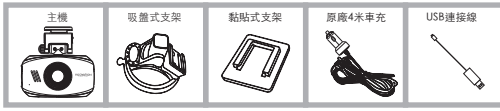

● 快速安裝指南　● 保固卡

● GPS模組

安裝GPS模組後，主機增加智慧行車輔助系統。

1.車道偏離警示
2.起步提醒
3.前車碰撞警示
4.行車軌跡記錄
5.疲勞駕駛提醒
6.超速提醒
7.低光源提醒
8.台灣地區定點測速照相提醒

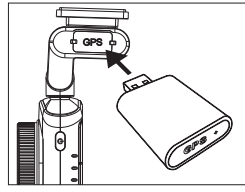

Ultra-HDR (高動態影像)
@1080p 30fps HDR錄影模式

MF2內建視連科最新的高動態影像錄影模式，可以在夜間平衡影像的亮部及暗部，產生極高品質的畫面。
預設的解析度為1080p 30fps HDR錄影模式。

UHDR
ULTRA HIGH
DYNAMIC RANGE

支架安裝說明

盒內附有專用吸盤式支架以及黏貼式支架。安裝方式如下圖，使用者可自行選擇適合自己愛車的方式以及安裝位置。

安裝以不影響行車視線為原則，請特別注意。

主機 + 吸盤式支架

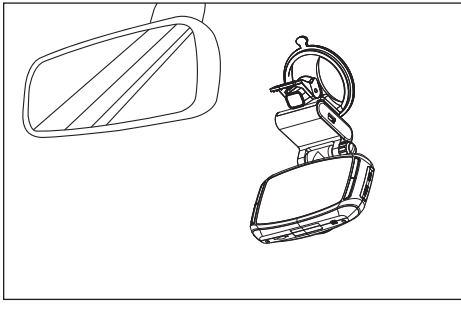

主機 + 黏貼式支架

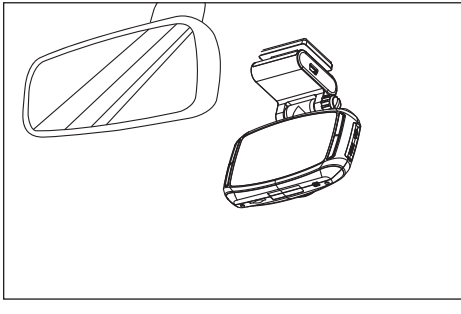

車用環境安裝方式

安裝步驟

1. 請務必使用Vicovation原廠車充線，以確保主機運作正常。

2. 請將車充電源線接至汽車點菸座，另一端接至主機的車充電源接口 (請特別留意，誤接到USB輸出接口會導致主機運作異常)。

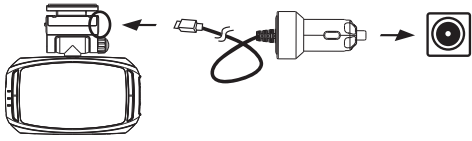

建議安裝位置與電源走線

簡易DIY走線方式：車充電源線可由副駕駛座(腳踏墊下方)，往上走右邊A柱內側防水膠條(可能需要工具輔助，請注意復原膠條位置。)，再經由副駕駛座遮陽板上固定，走至主機。

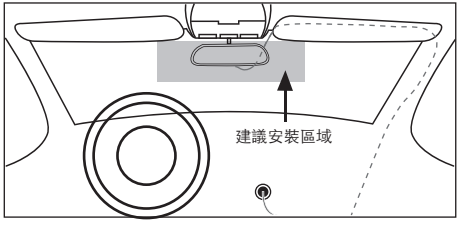

特別注意

1. 若您的愛車A柱內有安全氣囊，建議由專業人員協助安裝，不建議自行埋線安裝。

2. 安裝時請注意防水膠條的位置復原，否則可能影響車門防水性能。

3. 請務必使用盒內專屬車充電源線，請勿使用其他車充電源。

開始操作

1. 請依照正確方向插入 MicroSDHC / SDXC 記憶卡。輕推到底後會有輕微喀擦聲。(請注意卡片金手指方向)

2. Vico-MF2支援1296p/1080p錄影，嚴禁使用Class10等級以下之記憶卡。

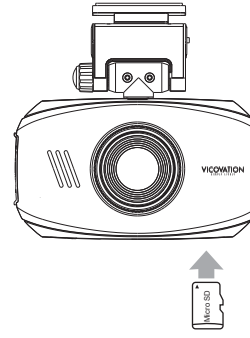

錄影時間對照表 (不含緊急錄影時間)

	2560p 30fps	1296p 30fps	1080p 30fps	720p 60fps	720p 30fps
8GB	60 mins	60 mins	70 mins	90 mins	130 mins
16GB	120 mins	120 mins	140 mins	180 mins	260 mins
32GB	240 mins	240 mins	280 mins	360 mins	520 mins
64GB	480 mins	480 mins	560 mins	720 mins	1040 mins

3. 電源連接後 (請連接車充電源接口)，自動開機進入錄影模式。首次使用，請先設定時間並將記憶卡格式化。

4. 拔插記憶卡前，請先停止錄影或關閉電源，請勿在錄影中任意拔除記憶卡以避免資料損毀。

5. USB輸出接口專用於連接電腦時，車充電源線接此處將導致機器運作異常。

主畫面圖示與操作說明

一般錄影模式

畫面上方橫列由左至右依次為：
當前模式
(錄影模式 / 拍照模式 / 回放模式) /
車充電源圖示 /
記憶卡圖示 /
碰撞感測器運作圖示 /
錄影時間 /
錄音靜音圖示

畫面左側直行由上而下依次為

當前模式 /
GPS訊號 /
超速提醒設定值 /
智慧行車輔助功能圖示 /
錄影解析度 / EV值 / 影像大小 /
循環錄影檔案大小

拍照模式

畫面上方橫列由左至右依次為：
當前模式
(錄影模式 / 拍照模式 / 回放模式) /
車充電源圖示 /
記憶卡圖示
畫面左下方為照片大小圖示

模式切換方式

先停止錄影→按向下鍵，即可切換操作模式。

選單功能介紹

進選單方式

先停止錄影→按左下方緊急錄影鍵，即可進入選單。

選單上方右側共有兩個標籤，切換標籤方式請按左下方緊急錄影鍵。

《標籤一》

影像解析度設定： 設定錄製影像解析度大小。預設值為1080p HDR。

影像品質： 設定影像壓縮品質。預設值為優質。

光源頻率： 依照各國光源環境調整。預設為自動判斷。

日期浮水印設定： 開啟或關閉浮水印。預設為開啟。

[智慧行車輔助系統]： 設定台灣地區定點測速照相警示、車道偏離警示、開大燈提醒、前車起步提醒、前方碰撞提醒、疲勞駕駛提醒。

循環錄影設置： 可設定每個影像檔案時間為1分鐘 / 3分鐘 / 5分鐘。預設值為3分鐘。

時區設定： 設定GPS時間校正區域。預設值為+8。台灣地區應設為+8。

曝光值設定： 可調整整體曝光值。

超速提醒設定： 設定提醒速限。預設值為關閉。(需加裝GPS模組)

按鍵燈設定： 設定按鍵的LED燈。預設值為開啟。

重力感應靈敏度設定： 設定重力感測器靈敏度。預設值為中靈敏度。

停車監控模式： 關閉或開啟停車監控模式。預設值為關閉(此功能為停車監控專用)。

《標籤二》

語言設定： 可選擇操作語言為繁體中文 / 簡體中文 / 英文。預設值為英文。

電視系統： 可選擇NTSC / PAL。台灣地區為NTSC。

個性化標籤： 可自行編輯影像標籤的文字內容。

時間設定： 手動設定現在時間。

格式化： 格式化記憶卡。

回復原廠預設值： 將所有設定還原出廠預設值。

螢幕自動關閉： 設定螢幕休眠時間。預設值為關閉。

提示音設定： 關閉或開啟系統提示音。預設值為開啟。

軟體版本： 可確認軟體版本。

回放操作

進入回放模式：

1. 錄影模式下，先按左上方確認鍵，停止錄影。然後按壓右下方切換鍵兩次進入回放模式。

2. 進入回放模式後，按右上方上鍵可以切換緊急錄影資料夾或是一般錄影資料夾。

3. 按確認鍵後可以開始選擇欲瀏覽的檔案，再按確認鍵即可撥放。

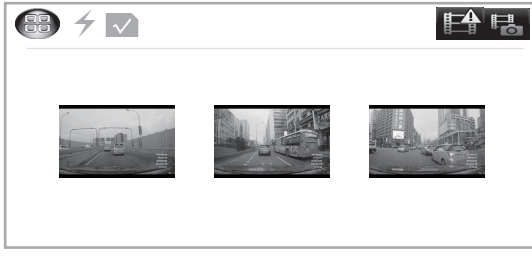

使用電腦撥放

1. 使用盒內附的USB連接線，一端接到主機的USB輸出接口，另一端與電腦連接。

2. 連接電腦後，主機會開機並且進入USB模式。此時可以透過瀏覽資料夾的方式點選欲瀏覽的檔案。

3. 建議將檔案複製到電腦後撥放，避免因傳輸速度不足造成影片撥放不順暢。

4. 首次與電腦連接時，主機會自動在SD卡內建立一個新的撥放器。消費者可利用撥放器來撥放含有GPS軌跡資訊的影片。使用Windows作業系統點選該程式時，請按右鍵，選擇“以系統管理員身份執行”。若未以“系統管理員身份執行”，可能無法正常使用。

三軸G-Sensor碰撞感測器

Vico-MF2配備G-Sensor碰撞(三軸重力)感測器，能在碰撞發生時，自動觸發緊急錄影功能。為了避免誤動作發生，G-Sensor功能預設值為關閉，請在車內安裝完畢之後進入選單開啟此功能。

關閉(預設)　高　中　低

緊急錄影介紹

1. 行車途中，遇見特殊狀況或緊急事故時，可手動觸發緊急錄影(左下方按鍵)。此時螢幕上方會出現一個黃色三角形符號。

2. 緊急錄影觸發點的前10秒以及後20秒(圖)影像，會儲存成一個獨立三十秒的影像檔案存放在EVENT資料夾下，不受循環錄影複寫。

HD-Player

使用產品盒內所附的Mini-USB線，連接主機USB輸出孔與電腦，主機會自動產生軌跡記錄播放軟體。

HD-Player

安裝HD-Player至電腦之後，選擇SD卡播放影像檔案，播放器會同步秀出GPS軌跡路徑與3軸G-Sensor的感應值。

其他選購配件

Vico Power-PLUS (選配)

Power-PLUS是一個車輛電力監控保護裝置,與車用電瓶連 接後,可在引擎熄火之後持續供電給行車記錄器,提供停 車監控功能使用。同時監控電瓶電壓狀態,電壓過低自動 斷電,避免電量過度消耗而無法發動引擎。

Power-PLUS 提供完整全面的保護功能,包含:

1. 低電壓斷電保護
2. 溫度過高斷電保護
3. 計時斷電保護
4. 大電流與突波電流保護

售後服務支援

有任何安裝操作問題，歡迎來信或是致電視連科客服中心。

Email:Service@vicovation.com
客服專線:02-2627-5883轉分機22, 23客服部
行動客服專線:0975-023-262
視連科客服中心地址:台北市內湖區瑞光路358巷38弄36號2樓之2
客服時間:週一~週五上午10:00~12:30，13:30~19:00 (例假日與國定假日除外)
歡迎您加入視連科Facebook專頁www.facebook.com/VicoVation，可得到第一手產品相關資訊與更新軟體資源，有任何問題也可以直接於Facebook留言提問。

視連科LINE線上客服

維修服務與保固條款

視連科保證產品皆經過完整測試，避免原物料及加工過程之瑕疵，並符合所公佈之規格。若產品在保固期間內，於正常環境使用下有任何不良或損壞發生，您可與原購買的經銷商連絡，透過原購買經銷商寄回視連科維修。若有其他相關維修問題，也歡迎您直接撥打客服專線與我們聯繫。

客服專線：02 -2627-5883轉23
行動客服專線：0975-023-262
LINE線上客服ID：vicovation
視連科客服部地址：
台北市內湖區瑞光路358巷38弄36號2樓之2

免付費維修服務保固說明

1. 視連科產品主機提供一年保固，自消費者之原始購買日起算一年。用戶須出示原始購買日之證明 (發票或是保固卡) 始能享有保固服務。若無法提供正常購買證明，視連科將依產品序號判定保固期間。

2. 若產品主機在購買七日內 (含)，於正常操作下發生硬體故障，視連科提供免費更換新品。

3. 所有配件 (車充，支架，線材)為耗損品，自購買日起享有六個月的免費保修服務。

4. 如逾保固期之維修與配件更換則另行報價收費。

Copyright © 2016 VicoVation®
www.VicoVation.com