ETHERNET MODULE RS-LAN
Instruction Manual
02/08.10

General Description

The interface module RS-LAN is an auxiliary device for establishment the communication of Fire Control Panels, manifactured by UniPOS with a personal computer through the internet network. The operation of the module is ensured by software, including not only the installation of virtual COM port into the personal computer but service software for the Fire Control Panels.The module can be used as included in system 7000 for connection of the control panel with a computer at greater distances or to be included in a network of conventional control panels and remote control panel for indication FS5200R, as a real substitute for the relevant environment (RS232 or RS485) to the existing Ethernet network (LAN).

Module consists of:

1. Coupling RJ45 for connection with the Ethernet network
2. Assembly board
3. Terminals for connection with the RS485
4. Coupling RS232 for connection with the control panel
5. Cable for connection with the control panel
6. Terminals for connection with interface RS232
7. Supply cable
8. Terminals of the power supply cable

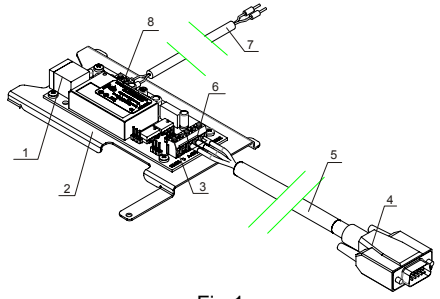

Fig.1

Complete Set

Module RS-LAN	- 1 pc.
Cable for connecting RS232 - with module RS-LAN	- 1 pc.
Supply cable	- 1 pc.
Remote columns for installation in conventional panels	- 4 pcs
CD with software	- 1 pc.
Instruction manual	- 1 pc.
Transport package	- 1 pc.

Technical data

Supply voltage	- (12-28)V DC
(the module is power supplied by terminal +28V from the Control Panel)	
Consumption	- up to 50 mA
Operational temperature range	- from minus 5°C to plus 40°C
Relative humidity resistance	- (93±3)% at 40°C
Dimensions (base not included)	- (105x45x22) mm

Assemblage and preparation for operation

1. Assemblage and preparation for operation in system 7000

1.1 Configuring the module into a PC (for connection with RS232)

1.1.1. Connect RS-LAN to the LAN card of the PC
1.1.2. Power supply the module (pos.8, fig.1)
1.1.3. To configure the module it is required installation software, file tdst-05-08-05-x86.exe for 32 bit operating system or tdst-5-08-05-x64.exe for 64 bit Windows operating system
1.1.4. Follow the steps described " Instructions for configuring and using the module RS-LAN" (file Conf_RS232_RS485_Eth_v2)

1.2. Installation of module RS-LAN into the Fire Control Panel IFS7002
Mount the device on the front side of the panel IFS7002
For the mechanical montage, use the screws by means of which the front panel is mounted.
1.2.1. Unscrew the screws of the panel (see position 2 and 6, Fig.2).
1.2.2. Place the module and tighten the two screws.
1.2.3. Pass the cable for connection with the LAN network through the technological openings of the and join it to the coupling of the module panel (pos 3, fig.2) .
1.2.4. Connect the base board by the supply cable from the set (coupling RS232) (pos.1, fig.2) with terminals "Rx", "Tx" and "GND" (pos.4, fig.2) of RS-LAN module. Join terminal "Rx" to the red wire, terminal "Tx" – to the black wire, and terminal "GND" – to the blue wire (fig.3).
1.2.5. Power supply is obtained by the supply cable from the set.
Red wire of the supply cable connects terminal "+" of the module with terminal "+28V" of the Control Panel, and the black wire – terminal "-"(pos.5, fig.2) of the module with terminal "GND" of the Control Panel (fig.3).
1.2.6 The module is ready for use.

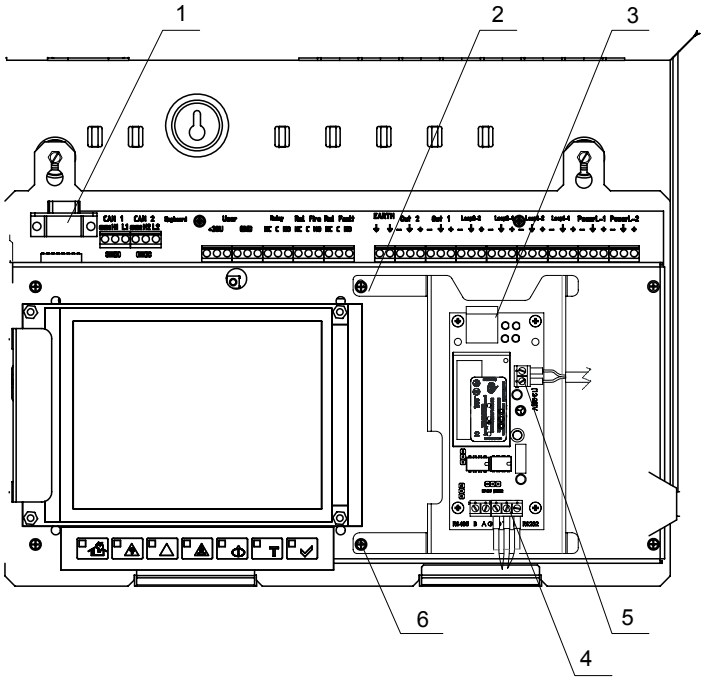

Fig.2

UniPOS

47, "San Stefano" Str., 5800 Pleven, BULGARIA
phone +359 64 891111, +359 64 891 100, fax +359 64 891 110
e-mail: office_pleven@unipos-bg.com

Mladost 1, bl.79B, entr.2, ap.17, 1784 Sofia, BULGARIA
phone/fax +359 2 9744469, +359 2 9743925
e-mail: office_sofia@unipos-bg.com

www.unipos-bg.com

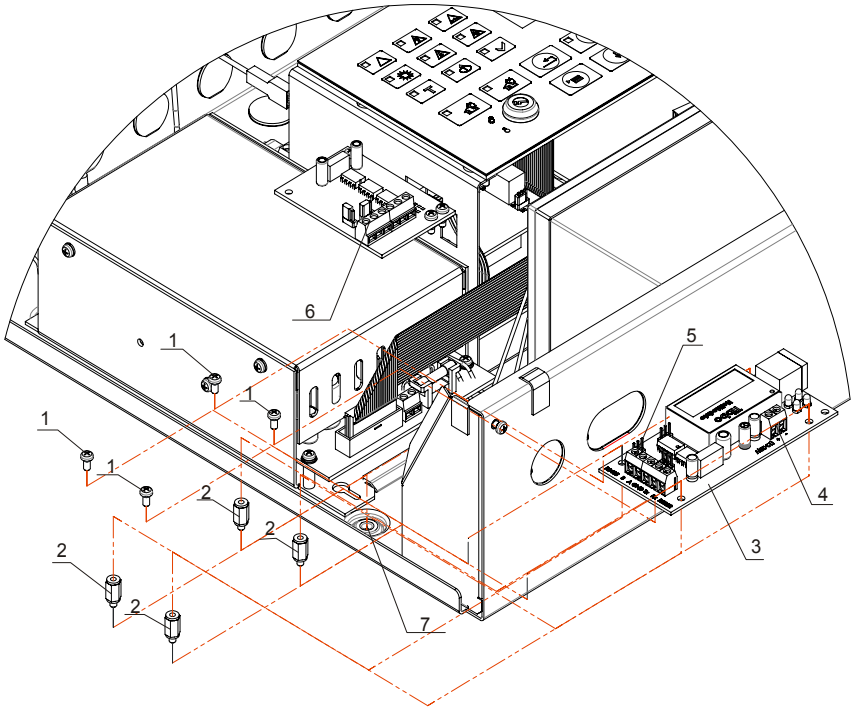

Fig.6

2.2.2.2. Cut-off the power supply of the Control Panel (Mains supply and Back up battery supply).
2.2.2.3. Mount the remote sleeves (pos.2, fig.6) into the provided openings for this (pos.7, fig.6) (Sleeves and openings are with crashed thread).
2.2.2.4. Mount the LAN module on the remote sleeves by means of the 4 screws (pos1, fig.6).
2.2.2.5. Join the power supply of the module (pos.4, fig.6) to terminals'' +28V'' and ''GND'' of the Control Panel.
2.2.2.6. By two-wire line connect the LAN module (pos.5, fig.6) and terminals A and B of module RS232/485 (pos.6, fig.6) from the Control Panel.
2.2.2.7.Connect the LAN module with the LAN network.

Warranty

The warranty period is 18 months from the date of sale providing that the installation requirements have been observed.

The manifacturer does not bear warranty liabilities for damages, caused through accidental mechanical damages, misuse, adaptation or modification after production.

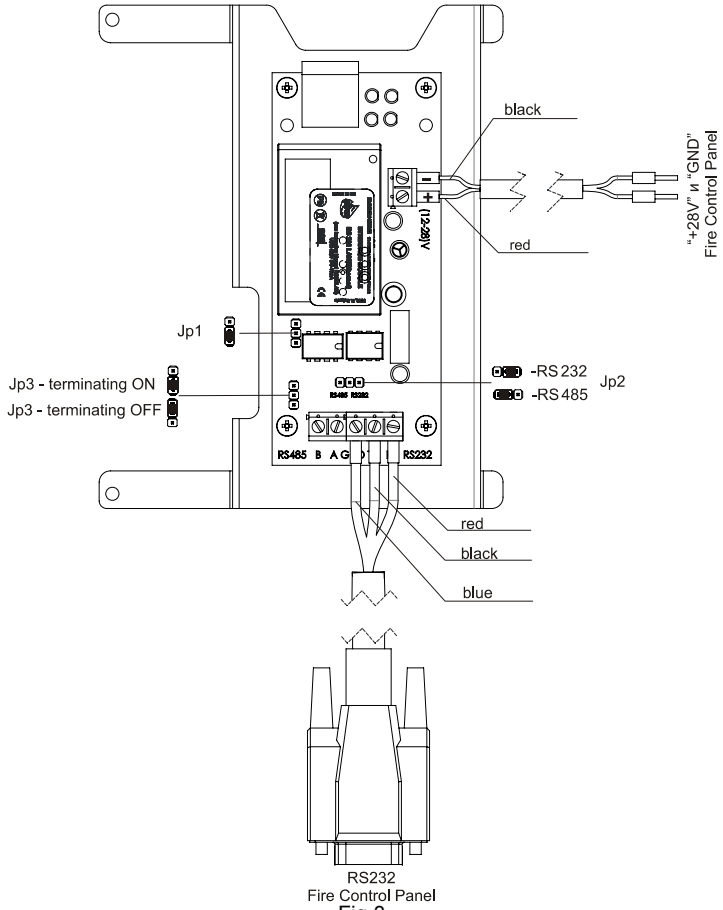

Fig.3

2. Assemblage and preparation for operation in a system of conventional Control Panels

To operate the RS-LAN module with conventional Control Panels is necessary that each of them has RS232/485. For panels FS5100 and FS5200 an Interface module RS232/485 is provided and for panel FS4000 - Expansion Module FD4201, with RS485 included.

2.1. Configuring the module into the PC (operation on RS485)

2.1.1. Configure mechanically the jumpers as follows (fig.3):

JP1 – in default position;
JP2 – in position RS485;
JP3 – in position line terminating on, with resistance 120 Ω.

2.1.2. Connect module RS-LAN to the LAN card of the PC.
2.1.3. Power supply the module (pos.8, fig.1)
2.1.4. To configure the module it is required an installation software,file tdst-05-08-05-x86.exe for 32 bit operating system or tdst-5-08-05-x64.exe for 64 bit Windows operating system.
2.1.5. Follow the steps described in the “Instructions for configuring and using the module RS-LAN (file Conf_RS232_RS485_Eth_v2).

2.2. Assemblage of module RS-LAN into Conventional Control Panels and into Remote Control panel FS5200R

Before the assemblage,it is necessary to dismount the the board of the module from its base (fig.1, pos.2).
2.2.1. Assemblage into Control panel FS5100.
2.2.1.1. Check the position of jumpers JP1, JP2 and JP3. If the module is an end of device, then place jumper JP3 into position "terminating resistance on’’. Example for termination of the line is given on Fig.4

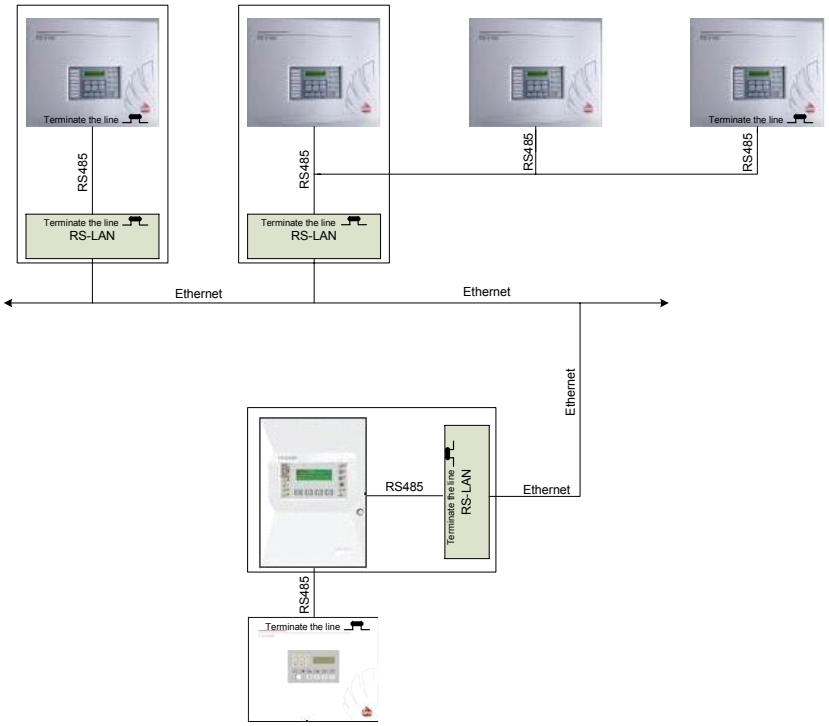

Fig.4

2.2.1.2.Cut-off the power supply of the Control Panel (Mains supply and Back up battery supply).
2.2.1.3.Dismount the front site of the panel (pos.1, fig.5) by unscrewing the four screws (pos.3, fig.5).
2.2.1.4. Release the coupling of the ribbon cable (see position 2, Fig.5) from the front panel.
2.2.1.5. Use screws (pos.5, fig.5), to mount the LAN module (pos.4, fig.5) on the 4 remote sleeves (pos.6, fig.5).
2.2.1.6. Join the power supply of the module (pos.7, fig.5) to terminals ‘’+24V’’ and ‘’GND’’ (pos9, pos.10, fig.5) of the Control Panel.

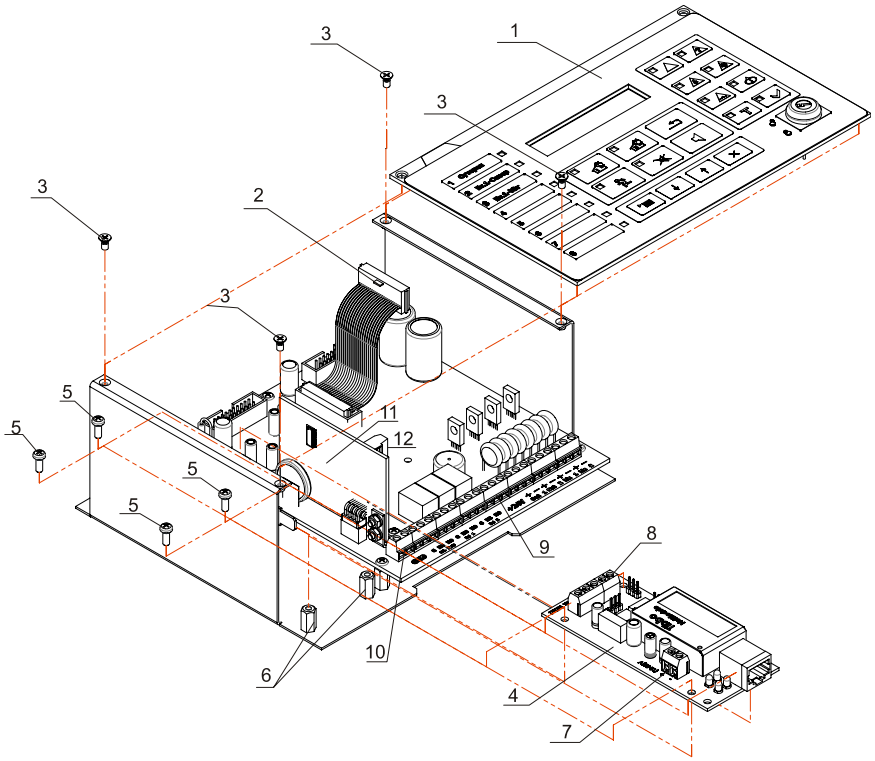

Fig.5

2.2.1.7. On two-wire line connect terminals A and B, the LAN module (pos.8, fig.5), with terminals A and B of Module RS232/485 (pos.11, Fig.5) of the Control Panel.
2.2.1.8.Mount back the ribbon cable and front panel.
2.2.1.9.Connect the LAN module with the c LAN network.
2.2.2. Installation into the Control panel FS5200 (FS5200E).
2.2.2.1. Check the position of jumpers JP1, JP2 и JP3. If the module is an end device, then place jumper JP3 into position ‘’terminating resistance on’’. Example for termination of the line is given on Fig.4.