Tenda

# Quick Installation Guide

16GE+2SFP Ethernet Switch With 16-Port PoE
24GE+2SFP Ethernet Switch With 24-Port PoE
TEG1118P-16-250W / TEG1126P-24-410W

## Package contents

- Switch x 1
- L-shaped bracket x 2
- Footpad x 4
- Power cord x 1
- Screw (KM3*8 mm) x 8
- Quick installation guide x 1

This guide instructs how to install and connect the device. For more details, please visit www.tendacn.com


**Technical Support**

Shenzhen Tenda Technology Co., Ltd.
6-8 Floor, Tower E3, NO.1001, Zhongshanyuan Road,
USA hotline: 1-800-570-5892
Toll Free: 7 x 24 hours
Canada hotline: 1-888-998-8966
Toll Free: Mon - Fri 9 am - 6 pm PST
Hong Kong hotline: 00852-81931998
Global hotline: +86 755-2765 7180 (China Time Zone)
Website: www.tendacn.com
E-mail: support@tenda.com.cn



**Copyright**
© 2020 Shenzhen Tenda Technology Co., Ltd. All rights reserved.
Tenda is a registered trademark legally held by Shenzhen Tenda Technology Co., Ltd. Other brand and product names mentioned herein are trademarks or registered trademarks of their respective holders. Specifications are subject to change without notice.


# 1 Install the device

## 1.1 Preparations

You shall prepare the following tools and materials for device installation.
- Rack mounting: ESD bracelet (or ESD gloves), screwdriver, 4 screws (to secure the switch to the rack)
- Wall mounting: ESD bracelet (or ESD gloves), marker, hammer drill, rubber hammer, screwdriver, 4 expansion bolts (M5*40 mm), 4 screws (PA5*25 mm, head diameter: 10 mm)
- Desktop mounting: ESD bracelet (or ESD gloves)

## 1.2 Installation

TEG1118P-16-250W is used as an example for illustration here.

### • Rack mounting (to a standard 19-inch rack)

**Step 1** Ensure that the rack is stable and level, and is properly grounded.
**Step 2** Fix the two L-shaped brackets to both sides of the switch using the included screws.

**Step 3** Choose a proper height and fix the L-shaped brackets to the rack using screws (self-prepared). Ensure that the switch is seated securely on the rack.

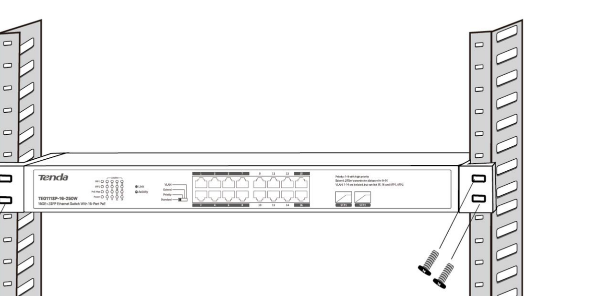

### • Wall mounting

Note:
- Do **NOT** install the switch with its air vents facing downward; otherwise, there will be potential safety hazards.
- This switch can only be installed on a concrete or non-flammable wall.

**Step 1** Rotate the two L-shaped brackets by 90 degrees and fix them to both sides of the switch with the included screws.

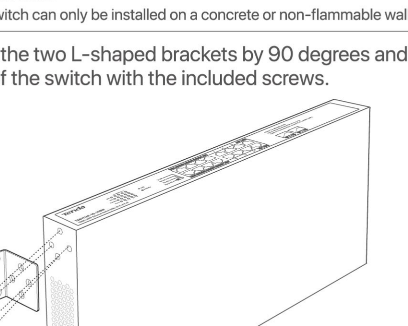

**Step 2** Horizontally place the switch onto the wall with its RJ45 ports facing upward. Then mark the screw holes with the marker on the wall.
**Step 3** Drill holes in the marked positions with a hammer drill, and then knock the expansion bolts (self-prepared, M5*40 mm) into the holes.
**Step 4** Insert the screws (self-prepared, PA5*25 mm, head diameter: 10 mm) through the holes of the two L-shaped brackets, and secure the screws into the expansion bolts with a screwdriver. Ensure that the switch is installed firmly with its RJ45 ports facing upward.

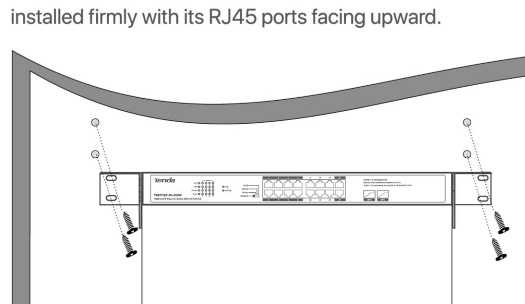

### • Desktop mounting

Paste the four footpads to the four recesses on the bottom of the switch. Then turn the switch upside down, and place it on a big enough, clean, stable and flat desktop.

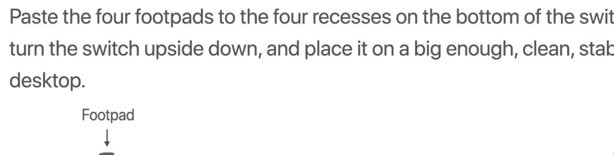


# 2 Connect the device

The typical network topology of the switch is as shown below. TEG1118P-16-250W is used for illustration.

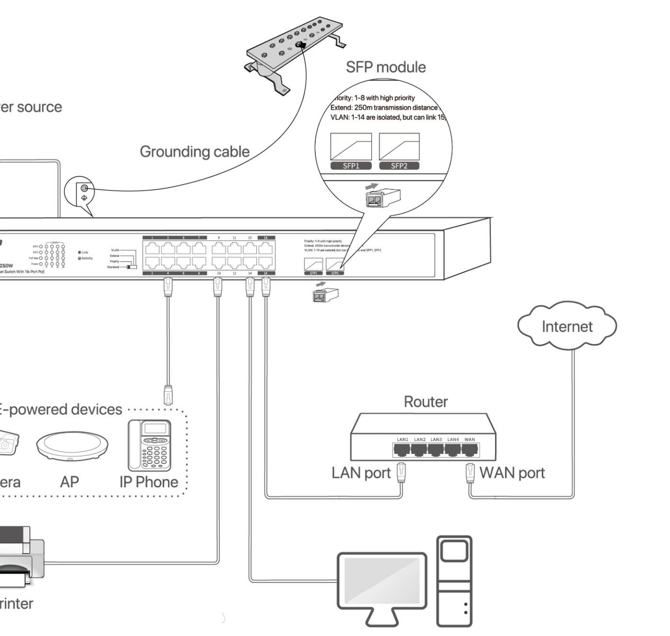


Note:
- The switch supports auto MDI/MDIX. You can use either a straight through cable or a crossover cable to connect the switch to Ethernet devices.
- The switch supports power supply priorities for the PoE ports. When the total power consumption of the PoE-powered devices exceeds the maximum output of the switch, the switch starts cutting the power supply from the port with the lowest power supply priority (the port with the largest port number) until the total power consumption of the PoE-powered devices is less than the maximum output of the switch.

After connection, you can check whether the switch is connected properly or change the working mode according to the following table.

| LED indicator/ Toggle | Description |
|---|---|
| SFP1, SFP2, Link/Act | **Solid on:** The port is connected to a device, but no data is being transmitted over the port.<br>**Blinking:** The port is connected to a device, and data is being transmitted over the port.<br>**Off:** The port is not connected or is not connected properly. |
| PoE-MAX | **Solid on:** The total PoE output power reaches the maximum output power of the switch.<br>**Off:** The total PoE output power does not reach the maximum output power of the switch. |
| Power | **Solid on:** The switch is powered on properly.<br>**Off:** The switch is not powered on or not powered on properly. |
| Working mode toggle | **Standard:** Default mode of the switch. In this mode, the switch works as an ordinary unmanaged switch, and all ports can communicate with each other. |
| | **Priority:** In this mode, ports 1 to 8 serve as ports with high priority. All ports can communicate with each other.<br>When multiple IP cameras are connected to the switch, you can use this mode and connect the IP cameras in key surveillance areas to the ports with high priority, and the uplink devices (such as NVR and router) to the two uplink ports. This guarantees a higher priority for IP cameras in key surveillance areas when network congestion occurs, and improves the smoothness of the monitoring videos. |
| | **Extend:** In this mode, the port statuses of the switches are as shown below.<br>• For TEG1118P-16-250W, the maximum transmission distance of ports 9 - 14 can reach 250 meters, and all ports can communicate with each other.<br>• For TEG1126P-24-410W, the maximum transmission distance of ports 17 - 22 can reach 250 meters, and all ports can communicate with each other.<br>For a better network extension effect, please use CAT5e Ethernet cables or above, and set the speed and duplex mode of the port of the peer device to Auto-negotiation. If the peer device is an IP camera, set its bit rate below 8 Mbps for timeliness of video transmission. |
| | **VLAN:** In this mode, the working statuses of the switches are as shown below.<br>• For TEG1118P-16-250W, ports 1 - 14 cannot communicate with each other, but can communicate with ports 15, 16, SFP1, and SFP2.<br>• For TEG1126P-24-410W, ports 1 - 22 cannot communicate with each other, but can communicate with ports 23, 24, SFP1, and SFP2.<br>VLAN mode helps isolate DHCP broadcast and reduce broadcast storm. |

## Specifications — English

| Model | | TEG1118P-16-250W | TEG1126P-24-410W |
|---|---|---|---|
| Port | 10/100/1000 Mbps RJ45 port | 16 | 24 |
| | 1000 Mbps SFP port | 2<br>*TEG1118P-16-250W: 2 independent SFP ports<br>*TEG1126P-24-410W: Port 23 and port SFP1 compose a combo port, and port 23 owns a higher priority. Port 24 and port SFP2 compose a combo port, and port 24 owns a higher priority. | |
| | Working mode | Standard, Priority, Extend, VLAN | |
| Performance | Switching mode | Store-and-forward | |
| | MAC address table learning | Auto aging, auto learning | |
| | MAC address table | 8 K | |
| PoE power supply | PoE standard | IEEE 802.3af, IEEE 802.3at | |
| | PoE power cable core | 8 cores: voltage of cores 1, 2, 4, 5 is +, and cores 3, 6, 7, 8 is - | |
| | PoE port | 1 - 16 | 1 - 24 |
| | Maximum output power of a single port | 30 W | |
| | Maximum output power of the switch | 230 W | 370 W |
| Dimensions (L x W x H) | | 440 mm x 179.6 mm x 44 mm | 440 mm x 284 mm x 44 mm |
| Input voltage | | 100 - 240V AC, 50/60Hz, 4 A | 100 - 240V AC, 50/60Hz, 6 A |
| Lightning protection | RJ45 port | Common mode: 6 kV | |
| | Power supply | Common mode: 6 kV<br>Differential mode: 4 kV | |
| Operating environment | | Temperature: 0°C - 45°C<br>Humidity: (10% - 90%) RH, non-condensing | |
| Storage environment | | Temperature: -40°C - 70°C<br>Humidity: (5% - 90%) RH, non-condensing | |
| Data transmission rate | | Ethernet: 10 Mbps (half duplex)/20 Mbps (full duplex)<br>Fast Ethernet: 100 Mbps (half duplex)/200 Mbps (full duplex)<br>Gigabit Ethernet: 2000 Mbps (full duplex) | |
| Transmission media | | Fast Ethernet: CAT5 UTP/STP or better<br>Gigabit Ethernet: CAT5e or CAT6 UTP/STP<br>1000Base-SX: MMF<br>1000Base-LX: MMF or SMF | |
| Network standards | | IEEE 802.3, IEEE 802.3u, IEEE 802.3x, IEEE 802.3ab,<br>IEEE 802.3z, IEEE 802.3af, IEEE 802.3at | |

## Характеристики — Русский

| Модель | | TEG1118P-16-250W | TEG1126P-24-410W |
|---|---|---|---|
| Порт | Порт RJ45 10/100/1000 Мбит/с | 16 | 24 |
| | Порт SFP 1000 Мбит/с | 2<br>*TEG1118P-16-250W: 2 независимых SFP порта<br>*TEG1126P-24-410W: Порты 23 и SFP1 составляют комбинированный порт, и порт 23 имеет более высокий приоритет. Порты 24 и SFP2 составляют комбинированный порт, и порт 24 имеет более высокий приоритет. | |
| | Рабочий режим | Standard (Стандарт), Priority (Приоритет), Extend (Расширение), VLAN | |
| выполнение | Режим переключения | Сохранение и дальнейшая передача | |
| | Изучение MAC-адресов | Автоматические старение, автоматическое обучение | |
| | Таблица MAC-адресов | 8 K | |
| Электропитание PoE | Стандарт PoE | IEEE 802.3af, IEEE 802.3at | |
| | Жила силового кабеля PoE | 8 ядер: напряжение ядер 1, 2, 4, 5 — "+", а для ядер 3, 6, 7, 8 — "-". | |
| | PoE-порт | 1 - 16 | 1 - 24 |
| | Максимальная выходная мощность одного порта | 30 Вт | |
| | Максимальная выходная мощность коммутатора | 230 Вт | 370 Вт |
| Размеры (Д х Ш х В) | | 440 мм x 179,6 мм x 44 мм | 440 мм x 284 мм x 44 мм |
| Входное напряжение | | 100–240 В перем. тока, 50/60 Гц, 4А | 100–240 В перем. тока, 50/60 Гц, 6А |
| Молниезащита | Порт RJ45 | Обычный режим: 6 kV | |
| | Источник питания | Обычный режим: 6 kV<br>Дифференциальный режим: 4 kV | |
| Рабочая среда | | Температура: 0°C - 45°C<br>Влажность: (10–90%) без конденсации | |
| Условия хранения | | Температура: -40°C - 70°C<br>Влажность: (5–90%) без конденсации | |
| Скорость передачи информации | | Ethernet: 10 Мбит/с (полудуплексный)/20 Мбит/с (полнодуплексный)<br>Fast Ethernet: 100 Мбит/с (полудуплексный)/200 Мбит/с (полнодуплексный)<br>Гигабитный Ethernet: 2000 Мбит/с (полнодуплексный) | |
| Средства передачи | | Fast Ethernet: Кабель CAT5 UTP/STP или выше<br>Gigabit Ethernet: Кабель CAT5E или CAT6 UTP/STP<br>1000Base-SX: MMF<br>1000Base-LX: MMF или SMF | |
| Стандарты сети | | IEEE 802.3, IEEE 802.3u, IEEE 802.3x, IEEE 802.3ab,<br>IEEE 802.3z, IEEE 802.3af, IEEE 802.3at | |

## Спецификации — Български

| Модел | | TEG1118P-16-250W | TEG1126P-24-410W |
|---|---|---|---|
| Порт | 10/100/1000 Mbps RJ45 порт | 16 | 24 |
| | 1000 Mbps SFP порт | 2<br>*TEG1118P-16-250W: 2 независими SFP порта<br>*TEG1126P-24-410W: 23 порт и SFP1 порт образуват комбиниран порт, а 23 порт е с по-висок приоритет. 24 порт и SFP2 порт образуват комбиниран порт, а 24 порт е с по-висок приоритет. | |
| | Работен режим | Standard (Стандартен), Priority (Приоритет), Extend (Удължаване), VLAN | |
| Технически показатели | Режим на превключване | Съхраняване и препращане | |
| | Обучение на MAC адреси | Самообучение, автоматично остаряване на остарели MAC адреси | |
| | Таблица с MAC адреси | 8 K | |
| PoE захранване | PoE стандарт | IEEE 802.3af, IEEE 802.3at | |
| | PoE захранващо кабелно ядро | 8 ядра: напрежение на ядра 1, 2, 4, 5 е +, и ядра 3, 6, 7, 8 е - | |
| | PoE порт | 1 - 16 | 1 - 24 |
| | Максимална изходна мощност на един порт | 30 W | |
| | Максимална изходна мощност на превключвателя | 230 W | 370 W |
| Размери (Д х Ш х В) | | 440 mm x 179,6 mm x 44 mm | 440 mm x 284 mm x 44 mm |
| Входящо напрежение | | 100 – 240 V AC, 50/60 Hz, 4 A | 100 – 240 V AC, 50/60 Hz, 6 A |
| Мълниезащита | RJ45 порт | Общ режим: 6 kV | |
| | Захранване | Общ режим: 6 kV<br>Диференциален режим: 4 kV | |
| Работна среда | | Температура: 0°C - 45°C<br>Влажност: (10% – 90%) RH, некондензиращи | |
| Среда за съхранение | | Температура: -40°C - 70°C<br>Влажност: (5% – 90%) RH, некондензиращи | |
| Скорост на предаване на данни | | Ethernet: 10 Mbps (полудуплекс)/20 Mbps (пълен дуплекс)<br>Бърз Ethernet: 100 Mbps (полудуплекс)/<br>200 Mbps (пълен дуплекс)<br>Гигабитен Ethernet: 2000 Mbps (пълен дуплекс) | |
| Носител за предаване | | Бърз Ethernet: CAT5 UTP/STP или по-добре<br>Гигабитен Ethernet: CAT5e или CAT6 UTP/STP<br>1000Base-SX: MMF<br>1000Base-LX: MMF или SMF | |
| Мрежови стандарти | | IEEE 802.3, IEEE 802.3u, IEEE 802.3x, IEEE 802.3ab,<br>IEEE 802.3z, IEEE 802.3af, IEEE 802.3at | |

## Spezifikationen — Deutsch

| Modell | | TEG1118P-16-250W | TEG1126P-24-410W |
|---|---|---|---|
| Port | 10/100/1000 Mbit/s RJ45-Port | 16 | 24 |
| | 1000 Mbit/s SFP-Port | 2<br>*TEG1118P-16-250W: 2 unabhängige SFP-Ports<br>*TEG1126P-24-410W: Die Ports 23 und SFP1 bilden einen Kombi-Port. Der Port 23 wird priorisiert behandelt. Die Ports 24 und SFP2 bilden einen Kombi-Port. Der Port 24 wird priorisiert behandelt. | |
| | Betriebsmodus | Standard, Priority (Priorität), Extend (Erweitern), VLAN | |
| Leistung | Modus wechseln | Speichern und weiterleiten | |
| | MAC-Adressentabelle lernen | Automatisches Altern, automatisches Lernen | |
| | MAC-Adressentabelle | 8 K | |
| PoE-Strom-versorgung | PoE-Standard | IEEE 802.3af, IEEE 802.3at | |
| | Anzahl der PoE-Kabelkerne | 8 Kerne: Spannung der Kerne 1, 2, 4, 5 ist „+".<br>Bei den Kernen 3, 6, 7, 8 ist sie „-" | |
| | PoE-Port | 1 - 16 | 1 - 24 |
| | Maximale Leistung eines einzelnen Ports | 30 W | |
| | Maximale Leistung vom Switch | 230 W | 370 W |
| Abmessungen (L x B x H) | | 440 mm x 179,6 mm x 44 mm | 440 mm x 284 mm x 44 mm |
| Nennspannung | | 100 - 240 V AC, 50/60 Hz, 4A | 100 - 240 V AC, 50/60 Hz, 6A |
| Überspann-ungsschutz | RJ45-Port | Normaler Modus: 6 kV | |
| | Stromversorgung | Normaler Modus: 6 kV<br>Differentialmodus: 4 kV | |
| Betriebsumgebung | | Temperatur: 0°C - 45°C<br>Luftfeuchtigkeit: (10 % - 90 %) RH, nicht kondensierend | |
| Lagerumgebung | | Temperatur: -40°C - 70°C<br>Luftfeuchtigkeit: (5% - 90 %) RH, nicht kondensierend | |
| Datenübertragungsrate | | Ethernet: 10 Mbit/s (Halbduplex)/20 Mbit/s (Vollduplex)<br>Fast Ethernet: 100 Mbit/s (Halbduplex)/200 Mbit/s (Vollduplex)<br>Gigabit Ethernet: 2000 Mbit/s (Vollduplex) | |
| Übertragungsmedien | | Fast Ethernet: CAT5 UTP/STP-Kabel oder höher<br>Gigabit Ethernet:CAT5e oder CAT6 UTP/STP-Kabel<br>1000Base-SX: MMF<br>1000Base-LX: MMF oder SMF | |
| Netzwerkstandards | | IEEE 802.3, IEEE 802.3u, IEEE 802.3x, IEEE 802.3ab,<br>IEEE 802.3z, IEEE 802.3af, IEEE 802.3at | |

## Specifiche — Italiano

| Modello | | TEG1118P-16-250W | TEG1126P-24-410W |
|---|---|---|---|
| Porte | Porta RJ45 10/100/1000 Mbps | 16 | 24 |
| | Porta SFP 1000 Mbps | 2<br>*TEG1118P-16-250W: 2 porte SFP indipendenti<br>*TEG1126P-24-410W: Le porte 23 e SFP1 compongono una porta combinata e la porta 23 ha una priorità più elevata. Le porte 24 e SFP2 compongono una porta combinata e la porta 24 ha una priorità più elevata. | |
| | Modalità di lavoro | Standard, Priority (Priorità), Extend (Estensione), VLAN | |
| Prestazioni | Modalità switching | Store-and-forward | |
| | Apprendimento degli indirizzi MAC | Auto invecchiamento, auto apprendimento | |
| | Tabella degli indirizzi MAC | 8 K | |
| Alimentazione PoE | Standard PoE | IEEE 802.3af, IEEE 802.3at | |
| | Nucleo del cavo di alimentazione PoE | 8 nuclei: la tensione dei nuclei 1, 2, 4, 5 è +; quella dei nuclei 3, 6, 7, 8 è - | |
| | Porta PoE | 1 - 16 | 1 - 24 |
| | Resa massima di una singola porta | 30 W | |
| | Resa massima dell'interruttore | 230 W | 370 W |
| Dimensioni (L x P x A) | | 440 mm x 179,6 mm x 44 mm | 440 mm x 284 mm x 44 mm |
| Tensione di ingresso | | 100 - 240 V CA, 50/60 Hz, 4A | 100 - 240 V CA, 50/60 Hz, 6A |
| Protezione contro i fulmini | Porta RJ45 | Modalità comune: 6 kV | |
| | Alimentazione | Modalità comune: 6 kV<br>Modalità differenziale: 4 kV | |
| Ambiente operativo | | Temperatura: 0°C - 45 °C<br>Umidità: 10% - 90% UR, senza condensa | |
| Ambiente di immagazzinaggio | | Temperatura: -40°C - 70°C<br>Umidità: (5% - 90%) UR, senza condensa | |
| Velocità di trasmissione dati | | Ethernet: 10 Mbps (half duplex) / 20 Mbps (full duplex)<br>Fast Ethernet: 100 Mbps (half duplex) / 200 Mbps (full duplex)<br>Gigabit Ethernet: 2000 Mbps (full duplex) | |
| Mezzi di trasmissione | | Fast Ethernet: Cavo UTP/STP CAT5 o superiore<br>Gigabit Ethernet: Cavo UTP/STP CAT5E o CAT6<br>1000Base-SX: MMF<br>1000Base-LX: MMF o SMF | |
| Standard di rete | | IEEE 802.3, IEEE 802.3u, IEEE 802.3x, IEEE 802.3ab,<br>IEEE 802.3z, IEEE 802.3af, IEEE 802.3at | |

## Especificações — Português

| Modelo | | TEG1118P-16-250W | TEG1126P-24-410W |
|---|---|---|---|
| Porta | Porta RJ45 10/100/1000 Mbps | 16 | 24 |
| | Porta SFP 1000 Mbps | 2<br>*TEG1118P-16-250W: 2 portas SFP independentes<br>*TEG1126P-24-410W: A porta SFP1 e a porta 23 formam uma porta combinada. A porta 23 tem maior prioridade. A porta SFP2 e a porta 24 formam uma porta combinada. A porta 24 tem maior prioridade. | |
| | Modos de funcionamento | Standard (Padrão), Priority (Prioridade), Extend (Estender), VLAN | |
| Desempenho | Modo de comutação | Guardar e reencaminhar | |
| | Aprendizagem de endereços MAC | Envelhecimento automático, aprendizagem automática | |
| | Tabela de endereços MAC | 8 K | |
| Fonte de alimentação PoE | Norma PoE | IEEE 802.3af, IEEE 802.3at | |
| | Núcleo de cabo de energia PoE | 8 núcleos: a tensão dos núcleos 1, 2, 4, 5 é superior e a dos núcleos 3, 6, 7, 8 é -. | |
| | Porta de PoE | 1 - 16 | 1 - 24 |
| | Saída máxima de uma única porta | 30 W | |
| | Saída máxima do comutador | 230 W | 370 W |
| Dimensões (C x L x A) | | 440 mm x 179,6 mm x 44 mm | 440 mm x 284 mm x 44 mm |
| Tensão de entrada | | 100-240V AC, 50/60Hz, 4 A | 100-240V AC, 50/60Hz, 6 A |
| Proteção contra raios | Porta RJ45 | Modo comum: 6 kV | |
| | Fonte de energia | Modo comum: 6 kV<br>Modo diferencial: 4 kV | |
| Ambiente operacional | | Temperatura: 0°C - 45°C<br>Humidade: (10% - 90%) de HR, sem condensação | |
| Ambiente de armazenamento | | Temperatura: -40°C - 70°C<br>Humidade: (5% - 90%) de HR, sem condensação | |
| Taxa de transmissão de dados | | Ethernet: 10 Mbps (half duplex)/20 Mbps (full duplex)<br>Ethernet rápida: 100 Mbps (half duplex)/200 Mbps (full duplex)<br>Gigabit Ethernet: 2000 Mbps (full duplex) | |
| Meios de transmissão | | Ethernet rápida: Cabo CAT5 UTP/STP ou superior<br>Gigabit Ethernet: Cabo CAT5E ou CAT6 UTP/STP<br>1000Base-SX: MMF<br>1000Base-LX: MMF ou SMF | |
| Padrões de rede | | IEEE 802.3, IEEE 802.3u, IEEE 802.3x, IEEE 802.3ab,<br>IEEE 802.3z, IEEE 802.3af, IEEE 802.3at | |

## Especificaciones — Español

| Modelo | | TEG1118P-16-250W | TEG1126P-24-410W |
|---|---|---|---|
| Puerto | Puerto RJ45 de 10/100/1000 Mbps | 16 | 24 |
| | Puerto SFP de 1000 Mbps | 2<br>*TEG1118P-16-250W: 2 puertos SFP independientes<br>*TEG1126P-24-410W: El puerto SFP1 y el puerto 23 forman un puerto en combo, y el puerto 23 tiene una prioridad más alta. El puerto SFP2 y el puerto 24 forman un puerto en combo, y el puerto 24 tiene una prioridad más alta. | |
| | Modo de funcionamiento | Standard (Estándar), Priority (Prioridad), Extend (Extender), VLAN | |
| Rendimiento | Modo de conmutación | Almacenar y retransmitir | |
| | Aprendizaje de direcciones MAC | Vencimiento automático, aprendizaje automático | |
| | Tabla de direcciones MAC | 8 K | |
| Fuente de alimentación PoE | Estándar de PoE | IEEE 802.3af, IEEE 802.3at | |
| | Núcleo del cable de alimentación PoE | 8 núcleos: el voltaje de los núcleos 1, 2, 4 y 5 es +, y el de los núcleos 3, 6, 7 y 8 es - | |
| | Puerto PoE | 1 - 16 | 1 - 24 |
| | Salida máxima de un solo puerto | 30 W | |
| | Salida máxima del conmutador | 230 W | 370 W |
| Dimensiones (L x An x Al) | | 440 mm x 179,6 mm x 44 mm | 440 mm x 284 mm x 44 mm |
| Voltaje de entrada | | 100 - 240 V CA, 50/60 Hz, 4 A | 100 - 240 V CA, 50/60 Hz, 6 A |
| Protección contra rayos | Puerto RJ45 | Modo común: 6 kV | |
| | Fuente de alimentación | Modo común: 6 kV<br>Modo diferencial: 4 kV | |
| Entorno de funcionamiento | | Temperatura: 0°C - 45 °C<br>Humedad: 10 %-90 % HR, sin condensación | |
| Entorno de almacenamiento | | Temperatura: -40°C - 70 °C<br>Humedad: 5 %-90 % HR, sin condensación | |
| Velocidad de transmisión de datos | | Ethernet: 10 Mbps (dúplex medio)/20 Mbps (dúplex completo)<br>Fast Ethernet:100 Mbps (dúplex medio)/200 Mbps (dúplex completo)<br>Gigabit Ethernet: 2000 Mbps (dúplex completo) | |
| Medios de transmisión | | Fast Ethernet: Cable CAT5 UTP/STP o superior<br>Gigabit Ethernet: Cable CAT5e o CAT6 UTP/STP<br>1000Base-SX: MMF<br>1000Base-LX: MMF o SMF | |
| Estándares de red | | IEEE 802.3, IEEE 802.3u, IEEE 802.3x, IEEE 802.3ab,<br>IEEE 802.3z, IEEE 802.3af, IEEE 802.3at | |

## Spécifications — Français

| Modèle | | TEG1118P-16-250W | TEG1126P-24-410W |
|---|---|---|---|
| Port | Port RJ45 10/100/1000 Mbps | 16 | 24 |
| | Port SFP 1000 Mbps | 2<br>*TEG1118P-16-250W: 2 ports SFP indépendants<br>*TEG1126P-24-410W: Le port SFP1 et le port 23 composent un port combiné et le port 23 possède une priorité plus élevée. Le port SFP2 et le port 24 composent un port combiné et le port 24 possède une priorité plus élevée. | |
| | Mode de fonctionnement | Standard (Norme), Priority (Priorité), Extend (Amplifier), VLAN | |
| Performance | Mode de commutation | Stockage et transmission | |
| | Apprentissage des adresses MAC | Auto vieillissement, auto apprentissage | |
| | Tableau des adresses MAC | 8 K | |
| Alimentation électrique PoE | Norme PoE | IEEE 802.3af, IEEE 802.3at | |
| | Âmes des câbles d'alimentation PoE | 8 cœurs : la tension des noyaux 1, 2, 4, 5 est + et celle des noyaux 3, 6, 7, 8 est - | |
| | Port PoE | 1 - 16 | 1 - 24 |
| | Sortie maximale d'un port unique | 30 W | |
| | Sortie maximale du commutateur | 230 W | 370 W |
| Dimensions (L x W x H) | | 440 mm x 179,6 mm x 44 mm | 440 mm x 284 mm x 44 mm |
| Tension d'entrée | | 100-240V AC, 50/60Hz, 4A | 100-240V AC, 50/60Hz, 6A |
| Protection contre la foudre | Port RJ45 | Mode commun : 6 kV | |
| | Alimentation électrique | Mode commun : 6 kV<br>Mode différentiel : 4 kV | |
| Environnement opérationnel | | Température : 0°C - 45°C<br>Humidité :(10 % - 90 %) HR, non-condensant | |
| Environnement de stockage | | Température : -40°C - 70°C<br>Humidité : (5 % - 90 %) HR, non-condensant | |
| Taux de transmission des données | | Ethernet : 10 Mbps (semi duplex)/20 Mbps (duplex intégral)<br>Fast Ethernet : 100 Mbps (semi duplex)/200 Mbps (duplex intégral)<br>Gigabit Ethernet : 2000 Mbps (duplex intégral) | |
| Support de transmission | | Fast Ethernet : CAT5 UTP/STP ou supérieur<br>Gigabit Ethernet : CAT5e ou CAT6 UTP/STP<br>1000Base-SX : MMF<br>1000Base-LX : MMF ou SMF | |
| Normes réseau | | IEEE 802.3, IEEE 802.3u, IEEE 802.3x, IEEE 802.3ab,<br>IEEE 802.3z, IEEE 802.3af, IEEE 802.3at | |

## Dane techniczne — Polski

| Model | | TEG1118P-16-250W | TEG1126P-24-410W |
|---|---|---|---|
| Port | Port RJ45 10/100/1000 Mb/s | 16 | 24 |
| | Port SFP 1000 Mb/s | 2<br>*TEG1118P-16-250W: 2 niezależne porty SFP<br>*TEG1126P-24-410W: Porty 23 i SFP1 tworzą port łączony, a port 23 ma wyższy priorytet. Porty 24 i SFP2 tworzą port łączony, a port 24 ma wyższy priorytet. | |
| | Tryb pracy | Standard (Standardowy), Priority (Priorytetowy), Extend (Rozwinięty), VLAN | |
| Wydajność | Tryb przełączania | Zapis-i-wprzód | |
| | Nauka adresów MAC | Nauka samodzielna, automatyczne starzenie | |
| | Tabela adresów MAC | 8 K | |
| System zasilania PoE | Standard PoE | IEEE 802.3af, IEEE 802.3at | |
| | Rdzeń kabla zasilającego PoE | 8 rdzeni: napięcie rdzeni 1, 2, 4, 5 wynosi +,<br>a rdzeni 3, 6, 7, 8 wynosi -. | |
| | Port PoE | 1 - 16 | 1 - 24 |
| | Maksymalna moc wyjściowa pojedynczego portu | 30 W | |
| | Maksymalna moc wyjściowa przełącznika | 230 W | 370 W |
| Wymiary (dł. x szer. x wys.) | | 440 mm x 179,6 mm x 44 mm | 440 mm x 284 mm x 44 mm |
| Napięcie wejściowe | | 100 - 240V AC, 50/60Hz, 4A | 100 - 240V AC, 50/60Hz, 6A |
| Ochrona odgromowa | Port RJ45 | Tryb wspólny: 6 kV | |
| | Zasilanie | Tryb wspólny: 6 kV<br>Tryb różnicowy: 4 kV | |
| Środowisko pracy | | Temperatura: 0°C - 45°C<br>Wilgotność: (10–90%) wilgotności względnej, bez kondensacji | |
| Środowisko przechowywania | | Temperatura: -40°C - 70°C<br>Wilgotność: (5–90%) wilgotności względnej, bez kondensacji | |
| Szybkość transmisji danych | | Sieć Ethernet: 10 Mb/s (półdupleks) / 20 Mb/s (pełny dupleks)<br>Szybka sieć Ethernet: 100 Mb/s (półdupleks) /<br>200 Mb/s (pełny dupleks)<br>Gigabitowa sieć Ethernet: 2000 Mb/s (pełny dupleks) | |
| Środki transmisji | | Szybka sieć Ethernet: Kabel CAT5 UTP/STP lub lepszy<br>Gigabitowa sieć Ethernet: Kabel CAT5e lub CAT6 UTP/STP<br>1000Base-SX: MMF<br>1000Base-LX: MMF lub SMF | |
| Standardy sieciowe | | IEEE 802.3, IEEE 802.3u, IEEE 802.3x, IEEE 802.3ab,<br>IEEE 802.3z, IEEE 802.3af, IEEE 802.3at | |

## Specificaţii — Română

| Model | | TEG1118P-16-250W | TEG1126P-24-410W |
|---|---|---|---|
| Port | Port RJ45 10/100/1000 Mbps | 16 | 24 |
| | Port SFP 1000 Mbps | 2<br>*TEG1118P-16-250W: 2 porturi SFP independente<br>*TEG1126P-24-410W: Portul SFP1 şi portul 23 formează un port combo, iar portul 23 are prioritate mai mare. Portul SFP2 şi portul 24 formează un port combo, iar portul 24 are prioritate mai mare. | |
| | Mod de funcţionare | Standard, Priority (Prioritate), Extend (Extindeți), VLAN | |
| Performanţă | Switching mode | Store-and-forward | |
| | MAC address table learning | Auto aging, auto learning | |
| | MAC address table | 8 K | |
| Alimentare PoE | PoE standard | IEEE 802.3af, IEEE 802.3at | |
| | Conductor cablu de alimentare PoE | 8 conductori: tensiunea conductorilor 1, 2, 4, 5 este +, iar a conductorilor 3, 6, 7, 8 este -. | |
| | Port PoE | 1 - 16 | 1 - 24 |
| | Putere maximă per port | 30 W | |
| | Putere maximă totală a switch-ului | 230 W | 370 W |
| Dimensiuni (L x l x Î) | | 440 x 179,6 x 44 mm | 440 x 284 x 44 mm |
| Tensiune de intrare | | 100 - 240 V c.a., 50/60 Hz, 4 A | 100 - 240 V c.a., 50/60 Hz, 6 A |
| Protecţie împotriva descărcărilor electrice | Port RJ45 | Mod obişnuit: 6 KV | |
| | Sursa de alimentare | Mod obişnuit: 6 KV<br>Mod diferenţial: 4 KV | |
| Mediu de funcţionare | | Temperatura: 0°C - 45°C<br>Umiditate: (10% - 90%) umiditate relativă, fără condens | |
| Mediu de depozitare | | Temperatura: -40°C - 70°C<br>Umiditate: (5% - 90%) umiditate relativă, fără condens | |
| Viteză de transmisie a datelor | | Ethernet: 10 Mbps (semi duplex)/20 Mbps (duplex complet)<br>Fast Ethernet: 100 Mbps (semi duplex)/200 Mbps (duplex complet)<br>Ethernet Gigabit: 2000 Mbps (duplex complet) | |
| Mediu de transmitere | | Fast Ethernet: Cablu CAT5 UTP/ STP sau o versiune mai nouă<br>Ethernet Gigabit: CAT5e sau CAT6 UTP/STP<br>1000Base-SX: MMF<br>1000Base-LX: MMF sau SMF | |
| Standard reţea | | IEEE 802.3, IEEE 802.3u, IEEE 802.3x, IEEE 802.3ab,<br>IEEE 802.3z, IEEE 802.3af, IEEE 802.3at | |

## Specifikáció — Magyar

| Modell | | TEG1118P-16-250W | TEG1126P-24-410W |
|---|---|---|---|
| Port | 10/100/1000 Mb/s RJ45 port | 16 | 24 |
| | 1000 Mb/s SFP port | 2<br>*TEG1118P-16-250W: 2 szabad SFP port<br>*TEG1126P-24-410W: Az SFP1 és 23 port kombinált portot képez, és az 23 port nagyobb prioritással rendelkezik. Az SFP2 és 24 port kombinált portot képez, és az 24 port nagyobb prioritással rendelkezik. | |
| | Üzemmódok | Standard (Szabvány), Priority (Prioritás), Extend (Kiterjesztési), VLAN | |
| Működés | Kapcsolási mód | Tárol és továbbít | |
| | MAC címtáblázat tanulás | Öntanulás, automatikus öregedés | |
| | MAC cím táblázat | 8 K | |
| PoE tápellátás | PoE szabvány | IEEE 802.3af, IEEE 802.3at | |
| | PoE tápkábel erek száma | 8 ér: az 1-es, 2-es, 4-es, 5-ös erek feszültsége + (pozitív);<br>a 3-as, 6-os, 7-es, 8-as ereké pedig - (negatív) | |
| | PoE port | 1 - 16 | 1 - 24 |
| | Egyetlen port maximális kimenete | 30 W | |
| | A váltó maximális kimenete | 230 W | 370 W |
| Méretek (H x Sz x M) | | 440 mm x 179,6 mm x 44 mm | 440 mm x 284 mm x 44 mm |
| Bemeneti feszültség | | 100-240 V váltóáram, 50/60Hz, 4 A | 100-240 V váltóáram, 50/60Hz, 6 A |
| Villámcsapás védelem | RJ45 port | Közös üzemmód: 6 kV | |
| | Tápellátás | Közös üzemmód: 6 kV<br>Differenciál üzemmód: 4 kV | |
| Működési környezet | | Hőfok: 0°C - 45°C<br>Páratartalom: 10 - 90% RH, nem kicsapódó | |
| Tárolási környezet | | Hőfok: -40°C - 70°C<br>Páratartalom: 5 - 90% RH, nem kicsapódó | |
| Adatátviteli sebesség | | Ethernet: 10 Mb/s (fél duplex)/20 Mb/s (teljes duplex)<br>Fast Ethernet: 100 Mb/s (fél duplex)/200 Mb/s (teljes duplex)<br>Gigabit Ethernet: 2000 Mb/s (teljes duplex) | |
| Átviteli közeg | | Fast Ethernet: CAT5 UTP/STP vagy gyorsabb kábel<br>Gigabit Ethernet: CAT5e vagy CAT6 UTP/STP<br>1000Base-SX: MMF<br>1000Base-LX: MMF vagy SMF | |
| Hálózati szabványok | | IEEE 802.3, IEEE 802.3u, IEEE 802.3x, IEEE 802.3ab,<br>IEEE 802.3z, IEEE 802.3af, IEEE 802.3at | |

## Özellikler — Türkçe

| Model | | TEG1118P-16-250W | TEG1126P-24-410W |
|---|---|---|---|
| Port | 10/100/1000 Mbps RJ45 portu | 16 | 24 |
| | 1000 Mbps SFP portu | 2<br>*TEG1118P-16-250W: 2 bağımsız SFP portu<br>*TEG1126P-24-410W: 23 no'lu port ve SFP1 portu paylaşımlı (Combo) olarak çalışır ve 23 no'lu port SFP1 portuna göre daha yüksek önceliğe sahiptir. 24 no'lu port ve SFP2 portu paylaşımlı (Combo) olarak çalışır ve 24 no'lu port SFP2 portuna göre daha yüksek önceliğe sahiptir | |
| | Çalışma Modu | Standard (Standart), Priority (Öncelik), Extend (Genişletmek), VLAN | |
| Performans | Anahtarlama modu | Sakla ve gönder | |
| | MAC adres öğrenme | Otomatik yaşlanma, otomatik öğrenme | |
| | MAC adres tablosu | 8 K | |
| PoE güç kaynağı | PoE standardı | IEEE 802.3af, IEEE 802.3at | |
| | PoE güç kablosu çekirdeği | 8 çekirdek: Çekirdek 1, 2, 4, 5. İçin voltaj + ve çekirdek 3, 6, 7, 8 için voltaj - | |
| | PoE portu | 1 - 16 | 1 - 24 |
| | Tek bir portun maksimum çıkış gücü | 30 W | |
| | Switch'in maksimum çıkış gücü | 230 W | 370 W |
| Boyutlar (B x E x Y) | | 440 mm x 179,6 mm x 44 mm | 440 mm x 284 mm x 44 mm |
| Giriş Gerilimi | | 100 - 240V AC, 50/60 Hz, 4A | 100 - 240V AC, 50/60 Hz, 6A |
| Yıldırım koruması | RJ45 portu | Ortak mod: 6 kV | |
| | Güç kaynağı | Ortak mod: 6 kV<br>Diferansiyel mod: 4 kV | |
| Çalışma ortamı | | Sıcaklık: 0°C - 45°C<br>Nem: (%10 - %90) RH, yoğuşmasız | |
| Depolama ortamı | | Sıcaklık: -40°C - 70°C<br>Nem: (%5 - %90) RH, yoğuşmasız | |
| Veri iletim hızı | | Ethernet: 10 Mbps (yarı çift yönlü) / 20 Mbps (tam çift yönlü)<br>Fast Ethernet: 100 Mbps (yarı çift yönlü) / 200 Mbps (tam çift yönlü)<br>Gigabit Ethernet: 2000 Mbps (tam çift yönlü) | |
| İletim Ortamları | | Fast Ethernet: CAT5 UTP/STP veya daha iyisi<br>Gigabit Ethernet: CAT5e veya CAT6 UTP/STP<br>1000Base-SX: MMF<br>1000Base-LX: MMF veya SMF | |
| Ağ Standartları | | IEEE 802.3, IEEE 802.3u, IEEE 802.3x, IEEE 802.3ab,<br>IEEE 802.3z, IEEE 802.3af, IEEE 802.3at | |

## المواصفات — العربية

| الطراز | | TEG1118P-16-250W | TEG1126P-24-410W |
|---|---|---|---|
| المنفذ | منفذ RJ45 بسرعة Mbps 10/100/1000 | 16 | 24 |
| | منفذ SFP بسرعة Mbps 1000 | 2<br>TEG1118P-16-250W: منفذا مستقلان SFP<br>TEG1126P-24-410W: المنفذ 23 و SFP1 يشكلان منفذا مختلطا، المنفذ 23 له اولوية أعلى. المنفذ 24 و SFP2 يشكلان منفذا مشتركا و المنفذ 24 له اولوية أعلى. | |
| | نمط العمل | Standard (قياسي)، Priority (أولوية)، Extend (تمديد)، VLAN | |
| الأداء | نمط التحويل | تخزين وإعادة توجيه | |
| | تعلم جدول عناوين MAC | الشيخوخة التلقائية ، التعلم التلقائي | |
| | جدول عناوين MAC | 8 K | |
| إمداد الطاقة PoE (الطاقة عبر الإيثرنت) | معايير PoE (الطاقة عبر الإيثرنت) | IEEE 802.3af ، IEEE 802.3at | |
| | نواة كابل نقل الطاقة PoE | 8 أنوية: جهد الأنوية 1 و2 و4 و5 بالموجب (+)، والأنوية 3 و6 و7 و8 بالسالب (-) | |
| | منفذ PoE (الطاقة عبر الإيثرنت) | من 1 إلى 16 | من 1 إلى 24 |
| | أقصى قدرة ناتجة من منفذ واحد | 30 واط | |
| | أقصى قدرة ناتجة من المحول | 230 واط | 370 واط |
| الأبعاد (الطول × العرض × الارتفاع) | | 440 مم × 179.6 مم × 44 مم | 440 مم × 284 مم × 44 مم |
| جهد الإدخال | | تيار متردد بجهد 100 - 240 فولت، 50/60 هرتز، 4 أمبير | تيار متردد بجهد 100 - 240 فولت، 50/60 هرتز، 6 أمبير |
| الوقاية من الصواعق | منفذ RJ45 | النمط المشترك: 6 كيلو فولت | |
| | إمداد الطاقة | النمط المشترك: 6 كيلو فولت<br>نمط تفاضلي: 4 كيلو فولت | |
| بيئة التشغيل | | درجة الحرارة: 0 درجة مئوية - 45 درجة مئوية<br>الرطوبة: رطوبة نسبية (10% - 90%)، بدون تكثف | |
| بيئة التخزين | | درجة الحرارة: -40 درجة مئوية - 70 درجة مئوية<br>الرطوبة: رطوبة نسبية (5% - 90%)، بدون تكثف | |
| معدل نقل البيانات | | إيثرنت: 10 Mbps (إرسال نصف مزدوج) / 20 Mbps (إرسال كامل الازدواج)<br>شبكة الإيثرنت السريعة: 100 Mbps (إرسال نصف مزدوج) / 200 Mbps (إرسال كامل الازدواج)<br>شبكة جيجابت إيثرنت: 2000 Mbps (إرسال كامل الازدواج) | |
| وسائط الإرسال | | شبكة الإيثرنت السريعة: CAT5 UTP/STP أو أفضل<br>شبكة جيجابت إيثرنت: CAT5e أو CAT6 UTP/STP<br>1000Base-SX: MMF<br>1000Base-LX: MMF أو SMF | |
| معايير الشبكة | | IEEE 802.3 وIEEE 802.3u وIEEE 802.3ab وIEEE 802.3z<br>وIEEE 802.3af وIEEE 802.3at وIEEE 802.3x | |

# Safety and statement

## Safety Precautions

Before performing an operation, read the operation instructions and precautions to be taken, and follow them to prevent accidents. The warning and danger items in other documents do not cover all the safety precautions that must be followed. They are only supplementary information, the installation and maintenance personnel need to understand the basic safety precautions to be taken.

1. Do not use this apparatus near water.
2. Clean only with dry cloth.
3. Do not block any ventilation openings, such as newspapers, table-cloth, curtains, etc.
4. Do not install near any heat sources such as radiators, heat registers, stoves or other apparatus that produce heat.
5. Do not damage the ground conductor or operate the device in the absence of well installed ground conductor. Conduct the appropriate electrical inspection.
6. Protect the power cord from being walk on or pinched particularly at the plugs, convenience receptacles and at the point where they exit from the apparatus.
7. Only use attachments/accessories specified by the manufacturer.
8. Unplug this apparatus during lighting storms or when unused for long periods of time.
9. Mains plug is used as the disconnect device, the disconnect device shall remain readily operable.
10. Refer all servicing to qualified service personnel. Servicing is required when the apparatus has been damaged in any way, such as power-supply cord or plug is damaged, liquid has been spilled or objects have fallen into the apparatus, the apparatus has been exposed to rain or moisture, does not operate normally, or has been dropped.
11. Warning: To reduce the risk of fire or electric shock, do not expose this apparatus to rain or moisture. The apparatus shall not be exposed to dripping or splashing.
12. Warning: To reduce the risk of electric shock, do not remove cover as there no user-serviceable parts inside. Refer servicing to qualified personnel.

### CE Mark Warning

This is a Class A product. In a domestic environment, this product may cause radio interference, in which case the user may be required to take adequate measures.
The mains plug is used as disconnect device, the disconnect device shall remain readily operable.

**NOTE:** (1) The manufacturer is not responsible for any radio or TV interference caused by unauthorized modifications to this equipment. (2) To avoid unnecessary radiation interference, it is recommended to use a shielded RJ45 cable.

### FCC Statement

This equipment has been tested and found to comply with the limits for a Class A digital device, pursuant to Part 15 of the FCC Rules. These limits are designed to provide reasonable protection against harmful interference when the equipment is operated in a commercial environment. This equipment generates, uses, and can radiate radio frequency energy and, if not installed and used in accordance with the instruction manual, may cause harmful interference to radio communications. Operation of this equipment in a residential area is likely to cause harmful interference in which case the user will be required to correct the interference at his own expense.
Operation is subject to the following two conditions: (1) this device may not cause harmful interference, and (2) this device must accept any interference received, including interference that may cause undesired operation.

**Caution!**

Any changes or modifications not expressly approved by the party responsible for compliance could void the user's authority to operate the equipment.

**NOTE**: (1) The manufacturer is not responsible for any radio or TV interference caused by unauthorized modifications to this equipment. (2) To avoid unnecessary radiation interference, it is recommended to use a shielded RJ45 cable.

### RECYCLING

This product bears the selective sorting symbol for Waste electrical and electronic equipment (WEEE). This means that this product must be handled pursuant to European directive 2012/19/EU in order to be recycled or dismantled to minimize its impact on the environment.
User has the choice to give his product to a competent recycling organization or to the retailer when he buys a new electrical or electronic equipment.