Quick Installation Guide

ProFi Switch Series
Pro-S8-150W/Pro-S24-410W/Pro-S24

Package contents

- Switch x 1
- Footpad x 4
- L-shaped bracket x 2
- Screw (KM3*8 mm) x 8
- Power cord x 1
- Quick installation guide x 1
- Console cable x 1 (only provided with Pro-S24-410W and Pro-S24)

Pro-S8-150W is used as an example for illustration in this guide unless otherwise specified.
For more details, please download the user guide of the corresponding model on the official website.

Technical Support

Address: Room 101, Unit A, First Floor, Tower E3, NO.1001, Zhongshanyuan Road, Nanshan District, Shenzhen, China. 518052
Tel: (86755) 2765 3089
Email: info@ip-com.com.cn
Website: www.ip-com.com.cn

Copyright

©2021 IP-COM Networks Co., Ltd. All rights reserved.
This documentation (including pictures, images, and product specifications, etc.) is for reference only. To improve internal design, operational function, and/or reliability, IP-COM reserves the right to make changes to the products described in this document without obligation to notify any person or organization of such revisions or changes.

1 Install the device

Safety precautions

Before performing an operation, read the operation instructions and precautions to be taken, and follow them to prevent accidents. The warning and danger items in other documents do not cover all the safety precautions that must be followed. They are only supplementary information, the installation and maintenance personnel need to understand the basic safety precautions to be taken.

1. Do not use this apparatus near water.
2. Clean only with dry cloth.
3. Do not block any ventilation openings, such as newspapers, table-cloth, curtains, etc.
4. Do not install near any heat sources such as radiators, heat registers, stoves or other apparatus that produce heat.
5. Do not damage the ground conductor or operate the device in the absence of well installed ground conductor. Conduct the appropriate electrical inspection.
6. Protect the power cord from being walk on or pinched particularly at the plugs, convenience receptacles and at the point where they exit from the apparatus.
7. Only use attachments/accessories specified by the manufacturer.
8. Unplug this apparatus during lighting storms or when unused for long periods of time.
9. Mains plug is used as the disconnect device, the disconnect device shall remain readily operable.
10. Refer all servicing to qualified service personnel. Servicing is required when the apparatus has been damaged in any way, such as power-supply cord or plug is damaged, liquid has been spilled or objects have fallen into the apparatus, the apparatus has been exposed to rain or moisture, does not operate normally, or has been dropped.
11. Warning: To reduce the risk of fire or electric shock, do not expose this apparatus to rain or moisture. The apparatus shall not be exposed to dripping or splashing.
12. Warning: To reduce the risk of electric shock, do not remove cover as there no user-serviceable parts inside. Refer servicing to qualified personnel.
13. If an outdoor cable is required, check whether the signal lightning arrester and AC surge arrester are connected to the switch.

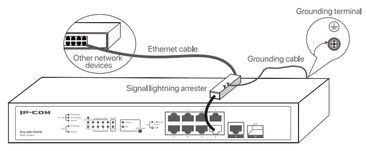

Note: There is a void sticker covering one of the screws on the housing of the switch. Do **NOT** remove the sticker without permission of the local agent. Otherwise you shall be responsible for any damage.

Preparations

You shall prepare the following tools and materials for device installation.
- Rack mounting: ESD bracelet (or ESD gloves), screwdriver, 4 screws (to secure the switch to the rack)
- Desktop mounting: ESD bracelet (or ESD gloves)
- Wall mounting: ESD bracelet (or ESD gloves), marker, hammer drill, rubber hammer, screwdriver, 4 expansion bolts (M5*40 mm), 4 screws (PA5*25 mm, head diameter: 10 mm)

Installation

Rack mounting (to a standard 19-inch rack)

Step 1 Ensure that the rack is stable and level, and is properly grounded.
Step 2 Fix the two L-shaped brackets to both sides of the switch with the included screws.
Step 3 Choose a proper height and fix the L-shaped brackets to the rack with screws (self-prepared). Ensure that the switch is stable on the rack.

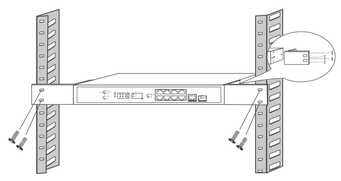

Desktop mounting

Paste the four footpads to the four recesses on the bottom of the switch. Then turn the switch upside down, and place it on a big enough, clean, stable and flat desktop.

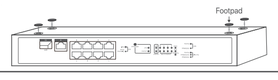

Wall mounting

Note:
- Do **NOT** install the switch with its air vents facing downward; otherwise, there will be potential safety hazards.
- This switch can only be installed on a concrete or non-flammable wall.

Step 1 Rotate the two L-shaped brackets by 90 degrees and fix them to both sides of the switch with the included screws.
Step 2 Horizontally place the switch onto the wall with its RJ45 ports facing upward. Then mark the screw holes with the marker.
Step 3 Drill holes in the marked positions, and then knock the expansion bolts (self-prepared, M5*40 mm) into the holes.
Step 4 Insert the screws (self-prepared, PA5*25 mm, head diameter: 10 mm) through the holes of the two L-shaped brackets, and secure the screws into the expansion bolts with a screwdriver. Ensure that the switch is installed firmly with its RJ45 ports facing upward.

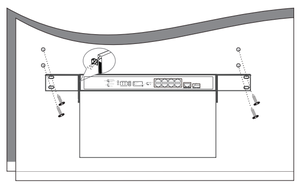

Grounding

Step 1 Connect one end of the grounding cable to the grounding terminal of the switch.
Step 2 Connect the other end of the grounding cable to the binding post on the grounding bar or to another grounded device.

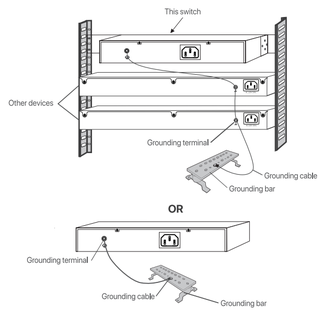

Note: Connect the grounding cable of the switch to the grounding system in an equipment room. Do **NOT** connect it to a fire hose or a lightning rod of the building.

2 Connect the device

The typical network topology of the switch series is as shown below.

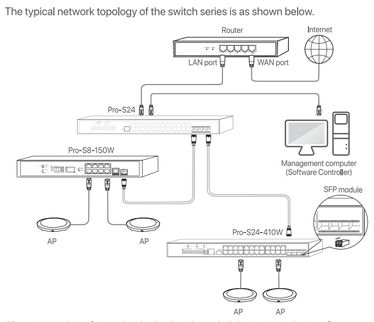

After connection, please check whether the switch is connected properly according to the following table.

LED indicator/button	Description
PoE-Max *Only applies to Pro-S8-150W and Pro-S24-410W	**Solid on:** Reach max. PoE budget **Off:** Not reach max. PoE budget
SYS	**Blinking:** System works properly **Solid on:** System is not working properly **Off:** System is starting up or not working properly
PWR	**Solid on:** Powered on **Off:** Powered off or not powered properly
Link/Act or PoE *Only applies to Pro-S8-150W and Pro-S24-410W	**Link/Act** and **PoE** multipurpose LED indicator. It indicates the connection status or PoE power supply status of RJ45 ports based on the converted mode of the **LED/Reset** button. - When the **Link/Act** LED indicator of **LED/Reset** is solid on, the descriptions of the **Link/Act or PoE** LED indicators are: **Solid on:** Connected but not active **Blinking:** Active in data transmission **Off:** Not connected or not connected properly Green light indicates the rate of the port is 1000 Mbps, and orange light indicates a rate of 10 Mbps or 100 Mbps. - When the **PoE** LED indicator of **LED/Reset** is solid on, the descriptions of the **Link/Act or PoE** LED indicators are: **Solid orange:** Supplying PoE power **Blinking orange:** Not supplying PoE power properly **Off:** Not connected or not supplying PoE power
Link/Act	**Solid on:** Connected but not active **Blinking:** Active in data transmission **Off:** Not connected or not connected properly
LED/Reset *Only applies to Pro-S8-150W and Pro-S24-410W	This multipurpose button is for both LED indicator converting and device reset. - Press the **LED/Reset** button to convert the mode of the **Link/Act or PoE** LED indicator. · When the **Link/Act** LED indicator of **LED/Reset** is solid on, the **Link/Act or PoE** LED indicator is in the **Link/Act** mode. · When **PoE** LED indicator of **LED/Reset** is solid on, the **Link/Act or PoE** LED indicator is in the **PoE** mode. - When the **SYS** LED indicator is blinking, hold down the **LED/Reset** button for about 10 seconds, and then release when all indicators are solid on. When the **SYS** LED indicator blinks again, the switch is reset successfully.
Reset *Only applies to Pro-S24	Reset button. When the **SYS** LED indicator is blinking, hold down the **Reset** button for about 10 seconds, and then release it when all indicators are solid on. When the **SYS** LED indicator blinks again, the switch is reset successfully.

Tips: The switch supports auto MDI/MDIX. You can use either a straight through cable or a crossover cable to connect the switch to Ethernet devices.

3 Configure the device

You can configure the switch through the Software Controller or the web UI of the switch.

Through the ProFi Software Controller

You can download the Software Controller at **www.ip-com.com.cn** and install it on the management computer of the switch. For details about how configure the switch through Software Controller, please refer to its user guide.

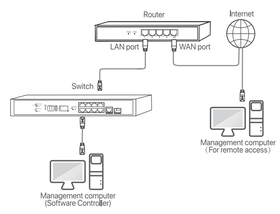

Through the web UI of the switch

Step 1 Use an Ethernet cable to connect the computer to one of the port 1 - 8 (1 - 24 for Pro-S24-410W or Pro-S24) of the switch.

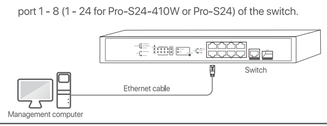

Step 2 Set the IP address of Ethernet (or Local Area Connection) of the computer to the same network segment of the switch's IP address.

The default IP address of the switch is 192.168.0.1. You can set the IP address of the computer to 192.168.0.*X* (*X* ranges from 2 to 254 and is not occupied) and the subnet mask to 255.255.255.0.

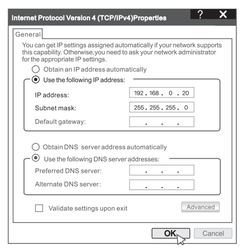

Step 3 Start a web browser (such as Chrome) on the computer, enter the management IP address of the switch (default: 192.168.0.1) in the address bar, and press **Enter**.

Step 4 Enter the login user name and password (both are **admin** by default) on the login page of the switch, and click **Login**.

Tips: If you fail to access the above page, please refer to question **1** in **FAQ**.

After successfully logging in to the web UI of the switch, you can configure the switch now.

FAQ

1. I cannot log in to the web UI of the switch. What should I do?
Try the following solutions:
- Check whether the switch is powered on properly: The **PWR** LED indicator lights solid on.
- Check whether the computer is connected to the switch properly using an Ethernet cable.
- Check whether the IP address of Ethernet (or Local Area Connection) of the computer is set to **192.168.0.*X*** (*X* ranges from 2 to 254 and is not occupied).
- Clear the cache of the web browser or try another web browser.
- Disable the firewall of the computer, or try another computer.
- Check whether only one device with the IP address 192.168.0.1 exists in the local network.
- If the problem persists, reset the switch and try again.
  Reset method: When the **SYS** LED indicator is blinking, hold down the **LED/Reset** or **Reset** button for about 10 seconds, and then release it when all indicators are solid on. When the **SYS** LED indicator blinks again, the switch is reset successfully.

2. I forget the login user name and password when logging in to the web UI of the switch. What should I do?
Try entering the default login user name and password (both are admin). If you still fail to log in to the web UI, reset the switch, then use the default user name and password to log in.

3. How do I connect the switch through the Console port (only applies to Pro-S24-410W and Pro-S24)?
Please operate as follows:
Step 1 Connect the computer and the Console port of the switch with the included Console cable.
Step 2 Run the serial interface connection software (such as Putty) on the computer. Enter **115200** in the **Speed** box and select **Serial** as the **Connection type**. Then click **Open** on the lower right corner.
Step 3 Press **Enter** twice and enter the user name and password of the switch (both are admin by default) on the page to enter the command-line interface of the switch. Pro-S24 is used as an example for illustration here.

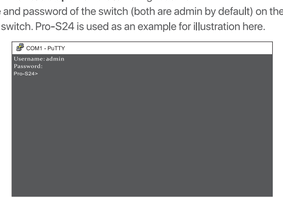

Specifications — English

Model		Pro-S8-150W	Pro-S24-410W	Pro-S24
Port	10/100/1000 Mbps RJ45 port	9	24	
	1000 Mbps SFP port	1 independent SFP port	4 independent SFP ports	
	Console port	/	1; Baud rate: 115200	
Performance	Switching mode	Store-and-forward		
	MAC address table learning	Auto learning, auto aging		
	MAC address table	16 K		
Dimensions (L x W x H)		294 mm x 179.6 mm x 44 mm	440 mm x 284 mm x 44 mm	440 mm x 179.6 mm x 44 mm
Input voltage		100 – 240V AC, 50/60Hz, 2A	100 – 240V AC, 50/60Hz, 6A	100 – 240V AC, 50/60Hz, 0.7A
PoE power supply	PoE standard	IEEE 802.3af, IEEE 802.3at		/
	PoE power cable core	8 cores: voltage of cores 1, 2, 4, 5 is +, and cores 3, 6, 7, 8 is -		
	PoE port	1 - 8	1 - 24	
	Maximum output power of a single port	30 W		
	Maximum output power of the switch	130 W	370 W	
Lightning protection	RJ45 port	Common mode: 6 kV		
	Power supply	Common mode: 6 kV Differential mode: 4 kV		
Operating environment		Temperature: 0°C - 40°C Humidity: (10% - 90%) RH, non-condensing	Temperature: 0°C - 45°C Humidity: (10% - 90%) RH, non-condensing	
Storage environment		Temperature: -40°C - 70°C Humidity: (5% - 90%) RH, non-condensing		
Data transmission rate		Ethernet: 10 Mbps (half duplex)/20 Mbps (full duplex) Fast Ethernet: 100 Mbps (half duplex)/200 Mbps (full duplex) Gigabit Ethernet: 2000 Mbps (full duplex)		
Transmission media		Ethernet: CAT3 UTP/STP or better Fast Ethernet: CAT5 UTP/STP or better Gigabit Ethernet: CAT5e or CAT6 UTP/STP 1000Base-SX: MMF 1000Base-LX: MMF or SMF		
Network standards		IEEE 802.3, IEEE 802.3u, IEEE 802.3x, IEEE 802.3ab, IEEE 802.3z, IEEE 802.1d, IEEE 802.1p, IEEE 802.1q, IEEE 802.1w, IEEE 802.1s		
		IEEE802.3af, IEEE802.3at		/

Характеристики — Русский

Модель		Pro-S8-150W	Pro-S24-410W	Pro-S24
Порт	Порт RJ45 10/100/1000 Мбит/с	9	24	
	Порт SFP 1000 Мбит/с	1 независимый SFP порт	4 независимых SFP порта	
	Консольный порт	/	1; Скорость передачи в бодах: 115200	
выполнение	Режим переключения	Сохранение и дальнейшая передача		
	Изучение MAC-адресов	Автоматические старение, автоматическое обучение		
	Таблица MAC-адресов	16 K		
Размеры (Д x Ш x В)		294 мм x 179,6 мм x 44 мм	440 мм x 284 мм x 44 мм	440 мм x 179,6 мм x 44 мм
Входное напряжение		100–240 В перем. тока, 50/60 Гц, 2A	100–240 В перем. тока, 50/60 Гц, 6A	100–240 В перем. тока, 50/60 Гц, 0,7A
Электропитание PoE	Стандарт PoE	IEEE 802.3af, IEEE 802.3at		/
	Жила силового кабеля PoE	8 ядер: напряжение ядер 1, 2, 4, 5 — "+", а для ядер 3, 6, 7, 8 — "-"		
	PoE-порт	1 - 8	1 - 24	
	Максимальная выходная мощность одного порта	30 Вт		
	Максимальная выходная мощность коммутатора	130 Вт	370 Вт	
Молниезащита	Порт RJ45	Обычный режим: 6 kV		
	Источник питания	Обычный режим: 6 kV Дифференциальный режим: 4 kV		
Рабочая среда		Температура: 0°C - 40°C Влажность: (10–90%) без конденсации	Температура: 0°C - 45°C Влажность: (10–90%) без конденсации	
Условия хранения		Температура: -40°C - 70°C Влажность: (5%—90%) без конденсации		
Скорость передачи информации		Ethernet: 10 Мбит/с (полудуплексный)/20 Мбит/с (полнодуплексный) Fast Ethernet: 100 Мбит/с (полудуплексный)/200 Мбит/с (полнодуплексный) Гигабитный Ethernet: 2000 Мбит/с (полнодуплексный)		
Средства передачи		Ethernet: Кабель CAT3 UTP/STP или выше Fast Ethernet: Кабель CAT5 UTP/STP или выше Гигабитный Ethernet: Кабель CAT5E или CAT6 UTP/STP 1000Base-SX: MMF 1000Base-LX: MMF или SMF		
Стандарты сети		IEEE 802.3, IEEE 802.3u, IEEE 802.3x, IEEE 802.3ab, IEEE 802.3z, IEEE 802.1d, IEEE 802.1p, IEEE 802.1q, IEEE 802.1w, IEEE 802.1s		
		IEEE802.3af, IEEE802.3at		/

Спецификации — Български

Модел		Pro-S8-150W	Pro-S24-410W	Pro-S24
Порт	10/100/1000 Mbps RJ45 порт	9	24	
	1000 Mbps SFP порт	1 независим SFP порт	4 независими SFP порта	
	Конзолен порт	/	1; Скорост на боуд: 115200	
Технически показатели	Режим на превключване	Съхраняване и препращане		
	Обучение на MAC адреси	Самообучение, автоматично остаряване на остарели MAC адреси		
	Таблица с MAC адреси	16 K		
Размери (Д x Ш x В)		294 mm x 179,6 mm x 44 mm	440 mm x 284 mm x 44 mm	440 mm x 179,6 mm x 44 mm
Входящо напрежение		100 – 240 V AC, 50/60 Hz, 2 A	100 – 240 V AC, 50/60 Hz, 6 A	100 – 240 V AC, 50/60 Hz, 0.7 A
PoE захранване	PoE стандарт	IEEE 802.3af, IEEE 802.3at		/
	PoE захранващо кабелно ядро	8 cores: voltage of cores 1, 2, 4, 5 is +, and cores 3, 6, 7, 8 is -		
	PoE порт	1 - 8	1 - 24	
	Максимална изходна мощност на един порт	30 W		
	Максимална изходна мощност на превключвателя	130 W	370 W	
Мълниезащита	RJ45 порт	Общ режим: 6 kV		
	Захранване	Общ режим: 6 kV Диференциален режим: 4 kV		
Работна среда		Температура: 0°C - 40°C Влажност: (10% – 90%) RH, некондензиращи	Температура: 0°C - 45°C Влажност: (10% – 90%) RH, некондензиращи	
Среда за съхранение		Температура: -40°C - 70°C Влажност: (5% – 90%) RH, некондензиращи		
Скорост на предаване на данни		Ethernet: 10 Mbps (полудуплекс)/20 Mbps (пълен дуплекс) Бърз Ethernet: 100 Mbps (полудуплекс)/200 Mbps (пълен дуплекс) GГигабитен Ethernet: 2000 Mbps (пълен дуплекс)		
Носител за предаване		Ethernet: CAT3 UTP/STP или по-добре Бърз Ethernet: CAT5 UTP/STP или по-добре Гигабитен Ethernet: CAT5e или CAT6 UTP/STP 1000Base-SX: MMF 1000Base-LX: MMF или SMF		
Мрежови стандарти		IEEE 802.3, IEEE 802.3u, IEEE 802.3x, IEEE 802.3ab, IEEE 802.3z, IEEE 802.1d, IEEE 802.1p, IEEE 802.1q, IEEE 802.1w, IEEE 802.1s		
		IEEE802.3af, IEEE802.3at		/

Spezifikationen — Deutsch

Modell		Pro-S8-150W	Pro-S24-410W	Pro-S24
Port	10/100/1000 Mbit/s RJ45-Port	9	24	
	1000 Mbit/s SFP-Port	1 unabhängiger SFP-Port	4 unabhängige SFP-Ports	
	Konsolen-Anschluss	/	1; Baudrate: 115200	
Leistung	Modus wechseln	Speichern und weiterleiten		
	MAC-Adressentabelle lernen	Automatisches Altern, automatisches Lernen		
	MAC-Adressentabelle	16 K		
Abmessungen (L x B x H)		294 mm x 179,6 mm x 44 mm	440 mm x 284 mm x 44 mm	440 mm x 179,6 mm x 44 mm
Nennspannung		100 – 240 V AC, 50/60 Hz, 2A	100 – 240 V AC, 50/60 Hz, 6A	100 – 240 V AC, 50/60 Hz, 0,7A
PoE-Stromversorgung	PoE-Standard	IEEE 802.3af, IEEE 802.3at		/
	Anzahl der PoE-Kabeladerne	8 Kerne: Spannung der Kerne 1, 2, 4, 5 ist „+". Bei den Kernen 3, 6, 7, 8 ist sie „-"		
	PoE-Port	1 – 8	1 – 24	
	Maximale Leistung eines einzelnen Ports	30 W		
	Maximale Leistung vom Switch	130 W	370 W	
Überspannungsschutz	RJ45-Port	Normaler Modus: 6 kV		
	Stromversorgung	Normaler Modus: 6 kV Differentialmodus: 4 kV		
Betriebsumgebung		Temperatur: 0°C – 40°C Luftfeuchtigkeit: (10 % – 90 %) RH, nicht kondensierend	Temperatur: 0°C – 45°C Luftfeuchtigkeit: (10 % – 90 %) RH, nicht kondensierend	
Lagerumgebung		Temperatur: -40°C – 70°C Luftfeuchtigkeit: (5% – 90 %) RH, nicht kondensierend		
Datenübertragungsrate		Ethernet: 10 Mbit/s (Halbduplex)/20 Mbit/s (Vollduplex) Fast Ethernet: 100 Mbit/s (Halbduplex)/200 Mbit/s (Vollduplex) Gigabit Ethernet: 2000 Mbit/s (Vollduplex)		
Übertragungsmedien		Ethernet: CAT3 UTP/STP-Kabel oder höher Fast Ethernet: CAT5 UTP/STP-Kabel oder höher Gigabit Ethernet:CAT5e oder CAT6 UTP/STP-Kabel 1000Base-SX: MMF 1000Base-LX: MMF oder SMF		
Netzwerkstandards		IEEE 802.3, IEEE 802.3u, IEEE 802.3x, IEEE 802.3ab, IEEE 802.3z, IEEE 802.1d, IEEE 802.1p, IEEE 802.1q, IEEE 802.1w, IEEE 802.1s		
		IEEE802.3af, IEEE802.3at		/

Specifiche — Italiano

Modello		Pro-S8-150W	Pro-S24-410W	Pro-S24
Porte	Porta RJ45 10/100/1000 Mbps	9	24	
	Porta SFP 1000 Mbps	1 porta SFP indipendente	4 porte SFP indipendenti	
	Porta console	/	1; Velocità: 115200	
Prestazioni	Modalità switching	Store-and-forward		
	Apprendimento degli indirizzi MAC	Auto invecchiamento, auto apprendimento		
	Tabella degli indirizzi MAC	16 K		
Dimensioni (L x P x A)		294 mm x 179,6 mm x 44 mm	440 mm x 284 mm x 44 mm	440 mm x 179,6 mm x 44 mm
Tensione di ingresso		100 – 240 V CA, 50/60 Hz, 2A	100 – 240 V CA, 50/60 Hz, 6A	100 – 240 V CA, 50/60 Hz, 0,7A
Alimentazione PoE	Standard PoE	IEEE 802.3af, IEEE 802.3at		/
	Nucleo del cavo di alimentazione PoE	8 nuclei: la tensione dei nuclei 1, 2, 4, 5 è +; quella dei nuclei 3, 6, 7, 8 è -		
	Porta PoE	1 – 8	1 – 24	
	Resa massima di una singola porta	30 W		
	Resa massima dell'interruttore	130 W	370 W	
Protezione contro i fulmini	Porta RJ45	Modalità comune: 6 kV		
	Alimentazione	Modalità comune: 6 kV Modalità differenziale: 4 kV		
Ambiente operativo		Temperatura: 0°C - 40 °C Umidità: (10% - 90%) UR, senza condensa	Temperatura: 0°C - 45 °C Umidità: (10% - 90%) UR, senza condensa	
Ambiente di immagazzinaggio		Temperatura: -40°C – 70°C Umidità: (5% - 90%) UR, senza condensa		
Velocità di trasmissione dati		Ethernet: 10 Mbps (half duplex) / 20 Mbps (full duplex) Fast Ethernet: 100 Mbps (half duplex) / 200 Mbps (full duplex) Gigabit Ethernet: 2000 Mbps (full duplex)		
Mezzi di trasmissione		Ethernet: Cavo UTP/STP CAT3 o superiore Fast Ethernet: Cavo UTP/STP CAT5 o superiore Gigabit Ethernet: Cavo UTP/STP CAT5E o CAT6 1000Base-SX: MMF 1000Base-LX: MMF o SMF		
Standard di rete		IEEE 802.3, IEEE 802.3u, IEEE 802.3x, IEEE 802.3ab, IEEE 802.3z, IEEE 802.1d, IEEE 802.1p, IEEE 802.1q, IEEE 802.1w, IEEE 802.1s		
		IEEE802.3af, IEEE802.3at		/

Especificações — Português

Modelo		Pro-S8-150W	Pro-S24-410W	Pro-S24
Porta	Porta RJ45 10/100/1000 Mbps	9	24	
	Porta SFP 1000 Mbps	1 porta SFP independente	4 portas SFP independentes	
	Porta da consola	/	1; Taxa de Baud: 115200	
Desempenho	Modo de comutação	Guardar e reencaminhar		
	Aprendizagem de endereços MAC	Envelhecimento automático, aprendizagem automática		
	Tabela de endereços MAC	16 K		
Dimensões (C x L x A)		294 mm x 179,6 mm x 44 mm	440 mm x 284 mm x 44 mm	440 mm x 179,6 mm x 44 mm
Tensão de entrada		100–240V AC, 50/60Hz, 2 A	100–240V AC, 50/60Hz, 6 A	100–240V AC, 50/60Hz, 0,7 A
Fonte de alimentação PoE	Norma PoE	IEEE 802.3af, IEEE 802.3at		/
	Núcleo de cabo de energia PoE	8 núcleos: a tensão dos núcleos 1, 2, 4, 5 é superior e a dos núcleos 3, 6, 7, 8 é -		
	Porta de PoE	1 – 8	1 – 24	
	Saída máxima de uma única porta	30 W		
	Saída máxima do comutador	130 W	370 W	
Proteção contra raios	Porta RJ45	Modo comum: 6 kV		
	Fonte de energia	Modo comum: 6 kV Modo diferencial: 4 kV		
Ambiente operacional		Temperatura: 0°C - 40 °C Humidade: (10% - 90%) de HR, sem condensação	Temperatura: 0°C - 45°C Humidade: (10% - 90%) de HR, sem condensação	
Ambiente de armazenamento		Temperatura: -40°C – 70°C Humidade: (5% - 90%) de HR, sem condensação		
Taxa de transmissão de dados		Ethernet: 10 Mbps (half duplex)/20 Mbps (full duplex) Ethernet rápida: 100 Mbps (half duplex)/200 Mbps (full duplex) Gigabit Ethernet: 2000 Mbps (full duplex)		
Meios de transmissão		Ethernet: Cabo CAT3 UTP/STP ou superior Ethernet rápida: Cabo CAT5 UTP/STP ou superior Gigabit Ethernet: Cabo CAT5E ou CAT6 UTP/STP 1000Base-SX: MMF 1000Base-LX: MMF ou SMF		
Padrões de rede		IEEE 802.3, IEEE 802.3u, IEEE 802.3x, IEEE 802.3ab, IEEE 802.3z, IEEE 802.1d, IEEE 802.1p, IEEE 802.1q, IEEE 802.1w, IEEE 802.1s		
		IEEE802.3af, IEEE802.3at		/

Especificaciones — Español

Modelo		Pro-S8-150W	Pro-S24-410W	Pro-S24
Puerto	Puerto RJ45 de 10/100/1000 Mbps	9	24	
	Puerto SFP de 1000 Mbps	1 puerto SFP independiente	4 puertos SFP independientes	
	Puerto de consola	/	1; Velocidad en baudios: 115200	
Rendimiento	Modo de conmutación	Almacenar y retransmitir		
	Aprendizaje de direcciones MAC	Vencimiento automático, aprendizaje automático		
	Tabla de direcciones MAC	16 K		
Dimensiones (L x An x Al)		294 mm x 179,6 mm x 44 mm	440 mm x 284 mm x 44 mm	440 mm x 179,6 mm x 44 mm
Voltaje de entrada		100 – 240 V CA, 50/60 Hz, 2 A	100 – 240 V CA, 50/60 Hz, 6 A	100 – 240 V CA, 50/60 Hz, 0,7 A
Fuente de alimentación PoE	Estándar de PoE	IEEE 802.3af, IEEE 802.3at		/
	Núcleo del cable de alimentación PoE	8 núcleos: el voltaje de los núcleos 1, 2, 4 y 5 es +, y el de los núcleos 3, 6, 7 y 8 es -		
	Puerto PoE	1 – 8	1 – 24	
	Salida máxima de un solo puerto	30 W		
	Salida máxima del conmutador	130 W	370 W	
Protección contra rayos	Puerto RJ45	Modo común: 6 kV		
	Fuente de alimentación	Modo común: 6 kV Modo diferencial: 4 kV		
Entorno de funcionamiento		Temperatura: 0°C - 40 °C Humedad: 10 %-90 % HR, sin condensación	Temperatura: 0°C - 45 °C Humedad: 10 %-90 % HR, sin condensación	
Entorno de almacenamiento		Temperatura: -40°C - 70 °C Humedad: 5 %-90 % HR, sin condensación		
Velocidad de transmisión de datos		Ethernet: 10 Mbps (dúplex medio)/20 Mbps (dúplex completo) Fast Ethernet: 100 Mbps (dúplex medio)/200 Mbps (dúplex completo) Gigabit Ethernet: 2000 Mbps (dúplex completo)		
Medios de transmisión		Ethernet: Cable CAT3 UTP/STP o superior Fast Ethernet: Cable CAT5 UTP/STP o superior Gigabit Ethernet: Cable CAT5e o CAT6 UTP/STP 1000Base-SX: MMF 1000Base-LX: MMF o SMF		
Estándares de red		IEEE 802.3, IEEE 802.3u, IEEE 802.3x, IEEE 802.3ab, IEEE 802.3z, IEEE 802.1d, IEEE 802.1p, IEEE 802.1q, IEEE 802.1w, IEEE 802.1s		
		IEEE802.3af, IEEE802.3at		/

Spécifications — Français

Modèle		Pro-S8-150W	Pro-S24-410W	Pro-S24
Port	Port RJ45 10/100/1000 Mbps	9	24	
	Port SFP 1000 Mbps	1 port SFP indépendant	4 ports SFP indépendants	
	Port de la console	/	1; Débit en Baud: 115200	
Performance	Mode de commutation	Stockage et transmission		
	Apprentissage des adresses MAC	Auto vieillissement, auto apprentissage		
	Tableau des adresses MAC	16 K		
Dimensions (L x W x H)		294 mm x 179,6 mm x 44 mm	440 mm x 284 mm x 44 mm	440 mm x 179,6 mm x 44 mm
Tension d'entrée		100–240V AC, 50/60Hz, 2A	100–240V AC, 50/60Hz, 6A	100–240V AC, 50/60Hz, 0,7A
Alimentation électrique PoE	Norme PoE	IEEE 802.3af, IEEE 802.3at		/
	Âmes des câbles d'alimentation PoE	8 cœurs : la tension des noyaux 1, 2, 4, 5 est + et celle des noyaux 3, 6, 7, 8 est -		
	Port PoE	1 – 8	1 – 24	
	Sortie maximale d'un port unique	30 W		
	Sortie maximale du commutateur	130 W	370 W	
Protection contre la foudre	Port RJ45	Mode commun : 6 kV		
	Alimentation électrique	Mode commun : 6 kV Mode différentiel : 4 kV		
Environnement opérationnel		Température : 0°C – 40°C Humidité : (10 % - 90 %) HR, non-condensant	Température : 0°C – 45°C Humidité : (10 % - 90 %) HR, non-condensant	
Environnement de stockage		Température : -40°C – 70°C Humidité : (5 % - 90 %) HR, non-condensant		
Taux de transmission des données		Ethernet : 10 Mbps (semi duplex)/20 Mbps (duplex intégral) Fast Ethernet : 100 Mbps (semi duplex)/200 Mbps (duplex intégral) Gigabit Ethernet : 2000 Mbps (duplex intégral)		
Support de transmission		Ethernet : CAT3 UTP/STP ou supérieur Fast Ethernet : CAT5 UTP/STP ou supérieur Gigabit Ethernet : CAT5e ou CAT6 UTP/STP 1000Base-SX : MMF 1000Base-LX : MMF ou SMF		
Normes réseau		IEEE 802.3, IEEE 802.3u, IEEE 802.3x, IEEE 802.3ab, IEEE 802.3z, IEEE 802.1d, IEEE 802.1p, IEEE 802.1q, IEEE 802.1w, IEEE 802.1s		
		IEEE802.3af, IEEE802.3at		/

Dane techniczne — Polski

Model		Pro-S8-150W	Pro-S24-410W	Pro-S24
Port	Port RJ45 10/100/1000 Mb/s	9	24	
	Port SFP 1000 Mb/s	1 niezależny port SFP	4 niezależne porty SFP	
	Port konsoli	/	1; Prędkość transmisji: 115200	
Wydajność	Tryb przełączania	Zapis-i-wprzód		
	Nauka adresów MAC	Nauka samodzielna, automatyczne starzenie		
	Tabela adresów MAC	16 K		
Wymiary (dł. x szer. x wys.)		294 mm x 179,6 mm x 44 mm	440 mm x 284 mm x 44 mm	440 mm x 179,6 mm x 44 mm
Napięcie wejściowe		100 – 240V AC, 50/60Hz, 2A	100 – 240V AC, 50/60Hz, 6A	100 – 240V AC, 50/60Hz, 0,7A
System z